Alle Rechte vorbehalten/ *All rights reserved*

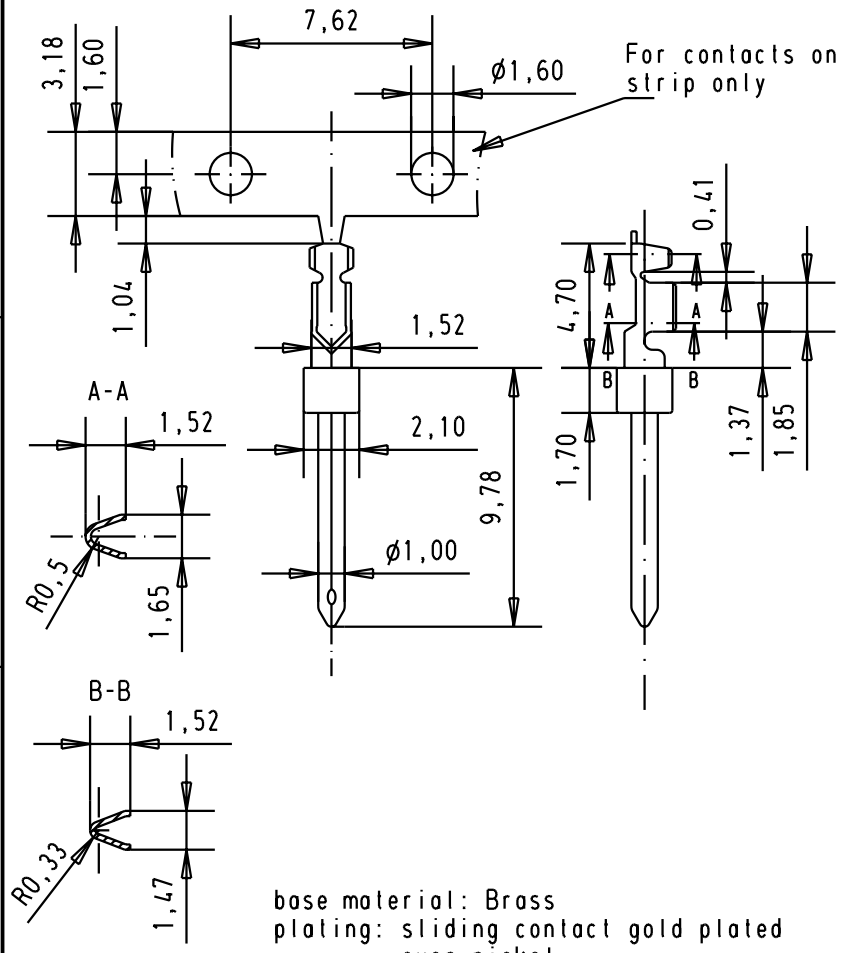

base material: Brass
plating: sliding contact gold plated over nickel
crimp area SnPb over nickel

STAMPED MALE CRIMP CONTACTS				
Number of contacts/reel	Wire gauge AWG	PL S4	PL 3	PL 2
500	AWG 24-28	0967 000 7165	0967 000 7167	0967 000 7168

UNROLLING LEFT

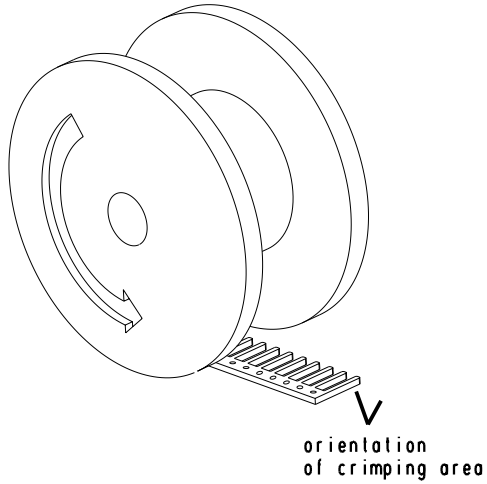

				Dat.	Name
			Detail.	24-MAR-03	PP
			Insp.		
			Stand.		
31475	24-MAR-03	PP			
Mod.	Dat.	Name			

All Dim. in mm
Orig. Size DIN A 4

HARTING EURL
F-95972 Paris

D-Sub, Stamped Male crimp Contacts AWG 24-28 500/reel, unrolling left

Maßstab/ *Scale* 3.5:1

TB 0967 000 716X

Sub.

Blatt/ *Page* 1