Alle Rechte vorbehalten/ *All rights reserved*

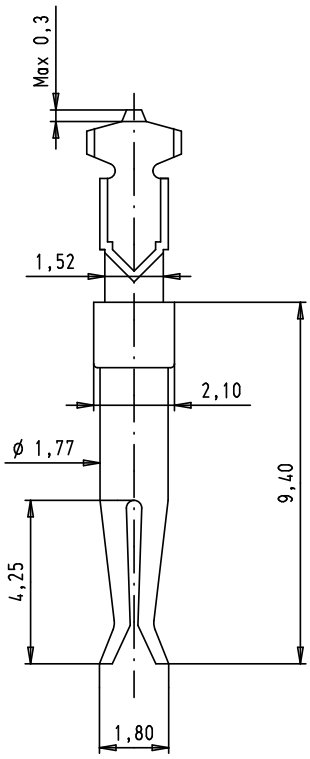

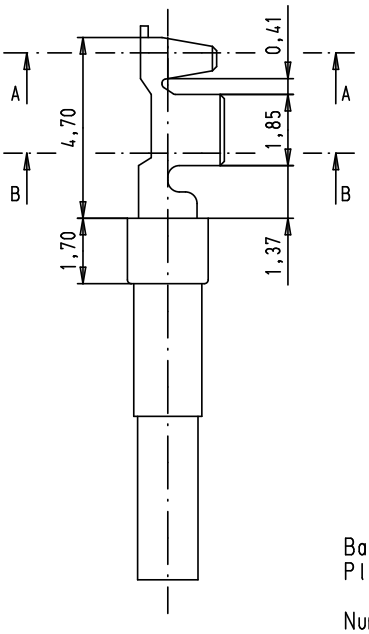

Section A-A

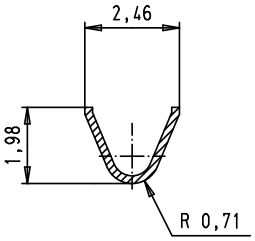

Section B-B

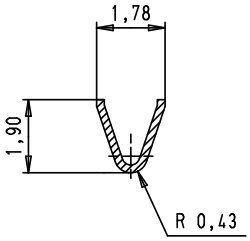

Base material: brass
Plating: sliding contact selective gold plated over nickel
nickel plated crimp area
Number of contacts per bag: 500

Part number	Performance level
09 67 000 8278	PL2
09 67 000 8277	PL3
09 67 000 8276	PL1

Mod.	Dat.	Name
33937	05/03/07	PK
32716	18/02/05	AL
31476	24/03/03	PP

	Dat.	Name
Detail.	24/03/03	PP
Insp.		
Stand.		

All Dim. in mm
Orig. Size DIN A 4

HARTING EURL
F-95972 Paris

D-Sub, stamped female
AWG 20-24 crimp contact,
bag packaging

Maßstab/ *Scale* 7:1

TB 09 67 000 827X

Sub.

Blatt/ *Page* 1/1

Downloaded from Elcodis.com electronic components distributor