THIS DRAWING IS UNPUBLISHED. RELEASED FOR PUBLICATION NOV ,2005.

© COPYRIGHT 2005 BY TYCO ELECTRONICS CORPORATION. ALL RIGHTS RESERVED.

LOC	DIST
E	B

REVISIONS

P	LTR	DESCRIPTION	DATE	DWN	APVD
	C	ECR-05-016219	24NOV05	JMS	FWK

NOTES:

1. PACK IN ACCORDANCE WITH AMP SPEC 107-3275
2. 100 TRAY PACK IN ACCORDANCE WITH AMP SPEC 107-3275
3. Ag PLATING
4. HAND TOOL : 9-1478240-0
5. DIE SET : 9-1478242-0
6. ELECTRICAL CHARACTERISTICS

FREQUENCY RANGE:	DC - 4 GHz
NOMINAL IMPEDANCE:	50 Ohm
INSULATION RESISTANCE:	5000 MOhm
WORKING VOLTAGE:	500 Volts RMS at Sea Level
DIELECTRIC WITHSTAND VOLTAGE:	1500 Volts RMS Max
CONTACT RESISTANCE:	
CENTRE CONTACT:	1.50 mOhm Max
OUTER CONTACT:	0.20 mOhm Max
VSWR @ 4GHz:	1.30:1 Max
INSERTION LOSS dB @ x 3 GHz:	0.20 Max

7. MECHANICAL CHARACTERISTICS

COUPLING NUT RETENTION FORCE:	N/A
CABLE RETENTION FORCE:	170N Min
DURABILITY:	500 Cycles Min

8. ENVIRONMENTAL CHARACTERISTICS

OPERATING TEMPERATURE:	-65 to +165 DegC

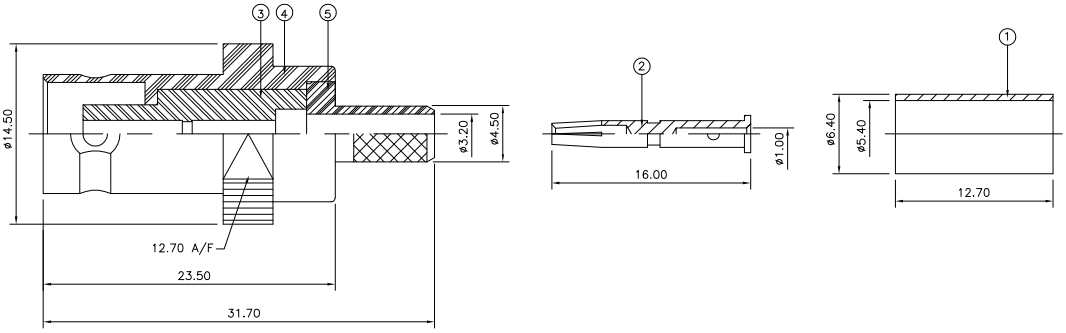

RECOMMENDED CENTRE CONTACT A/F HEX

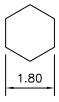

RECOMMENDED CRIMP SLEEVE A/F HEX

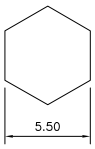

RECOMMENDED CABLE STRIPPING DIM'S

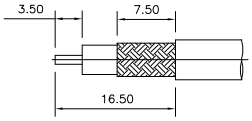

		1	1	BRASS 3	CHASSIS	5
		1	1	BRASS 3	BODY	4
		1	1	PTFE	INSULATION	3
		1	1	BRASS 3	CONTACT	2
		1	1	BRASS 3	FERRULE	1
		6--0	1--0	MATERIAL	DESCRIPTION	ITEM
		2	1			
QUANTITY PER ASSY				PARTS LIST		

THIS DRAWING IS A CONTROLLED DOCUMENT.

DIMENSIONS: mm

TOLERANCES UNLESS OTHERWISE SPECIFIED:
0 PLC ± -
1 PLC ± -
2 PLC ± -
3 PLC ± -
4 PLC ± -
ANGLES ± -

MATERIAL: SEE TABLE

FINISH: -

DWN J.SANDWELL 24NOV05
CHK S.PARLOW 24NOV05
APVD F.WHEELER-KING 24NOV05
PRODUCT SPEC 108-3435
APPLICATION SPEC 411-3247
WEIGHT -

tyco Electronics

Tyco Electronics Corporation
Bideford EX39 4HE

NAME: BNC STRAIGHT JACK CRIMP 50 OHM RG58C/U, 141A/U, URM43, 76, KX15 -

SIZE	CAGE CODE	DRAWING NO	RESTRICTED TO
A3	00779	C-1337442	-

CUSTOMER DRAWING

SCALE	SHEET	OF	REV
NTS	1	1	C

AMP 1470-19 REV 31MAR2000

Downloaded from Elcodis.com electronic components distributor