THIS DRAWING IS UNPUBLISHED. RELEASED FOR PUBLICATION -,- .
© COPYRIGHT - By - ALL RIGHTS RESERVED.

LOC	DIST
—	—

REVISIONS

P	LTR	DESCRIPTION	DATE	DWN	APVD
	B	REVISED PER ECO-14-018888	06JAN2015	AP	RP

Manufacturing date consisting of:
2 digits for the year (YY), 2 digits for the week (WW) and 1 digit for the day (D)

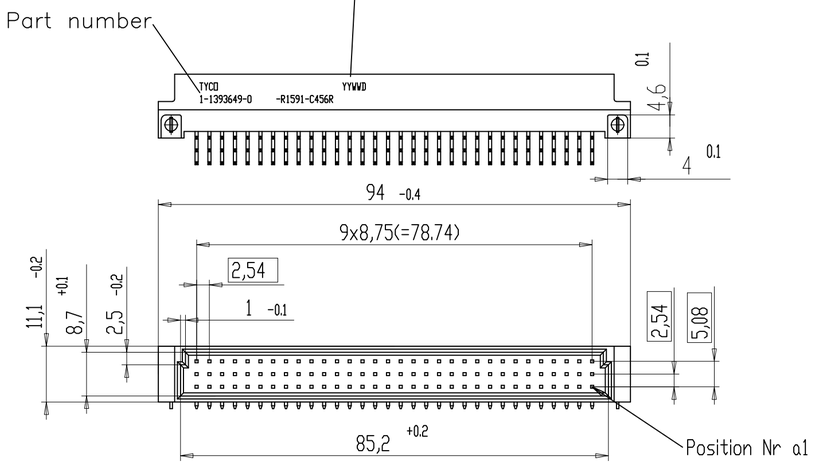

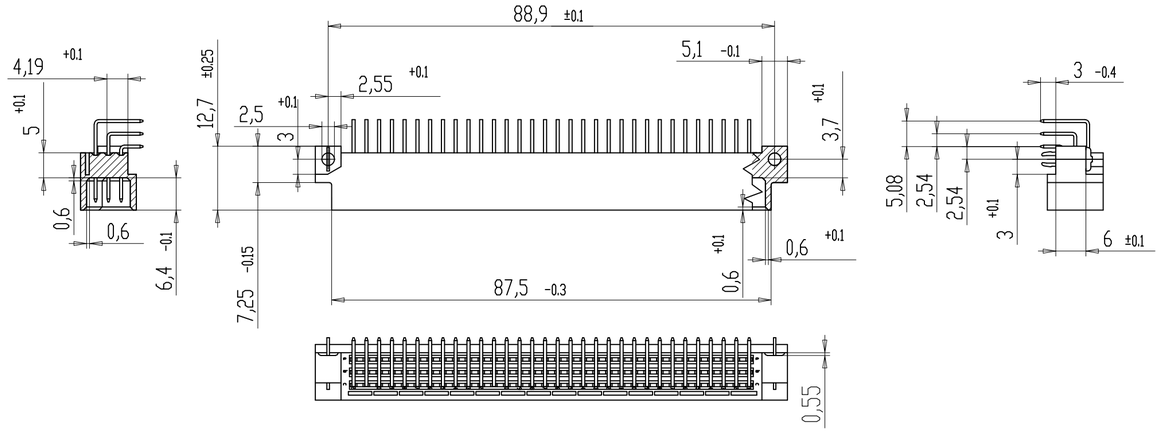

Contact lengths (5:1)

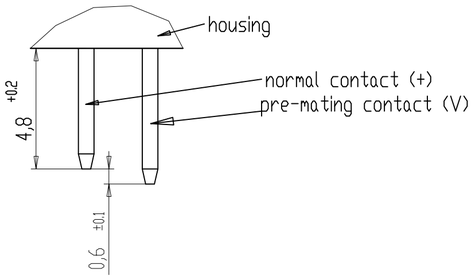

Dimensioning for mounting clips (2:1)

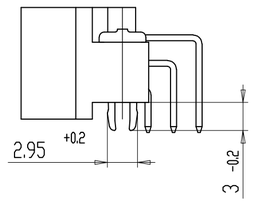

all dimensions are in mm

Contact assignment (96 pins)

```
                1         2         3
      123456789012345678901234567890 12
Row A: V+++++++++++++++++++++++++++++V
    B: ++++++++++++++++++++++++++++++
    C: V+++++++++++++++++++++++++++++V
```

\+ = normal contact
V = pre-mating contact

Mounting holes in PCB

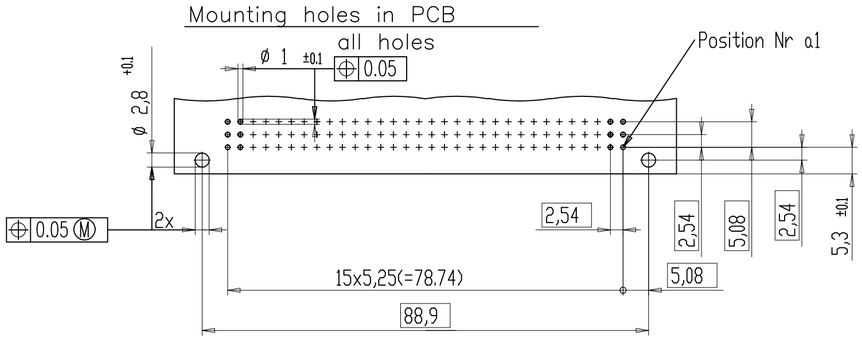

Acc to DIN EN 60603-2 performance level 2
Housing material: PCT 30% glassfilled (UL94V-0), black
deflection Temp. acc to ISO 75 method A(1.82 MPa) : 247°C
Contact material: Copper alloy
Plating : - contact area: gold
- termination: Sn

V42254-R1591-C456R	1-1393649-0
Prod. Descr. Code	TE PN

THIS DRAWING IS A CONTROLLED DOCUMENT.	DWN CUVELIER 23AUG1999	TE Connectivity	
DIMENSIONS: mm	CHK —	NAME PC612 MALE TYPE c —	
TOLERANCES UNLESS OTHERWISE SPECIFIED: 0 PLC ± - 1 PLC ± - 2 PLC ± - 3 PLC ± - 4 PLC ± - ANGLES ± -	APVD —	SIZE A2 / CAGE CODE 00779 / DRAWING NO C-1-1393649-0	RESTRICTED TO —
MATERIAL - / FINISH -	PRODUCT SPEC — / APPLICATION SPEC — / WEIGHT —	SCALE 1:1 / SHEET 1 OF 1	REV B
	CUSTOMER DRAWING		