THIS DRAWING IS UNPUBLISHED. RELEASED FOR PUBLICATION -,- .
© COPYRIGHT - BY TYCO ELECTRONICS CORPORATION. ALL RIGHTS RESERVED.

LOC	DIST
DW	—

REVISIONS

P	LTR	DESCRIPTION	DATE	DWN	APVD
	C	REVISED (ECO-11-013077)	23JUN11	JC	WK

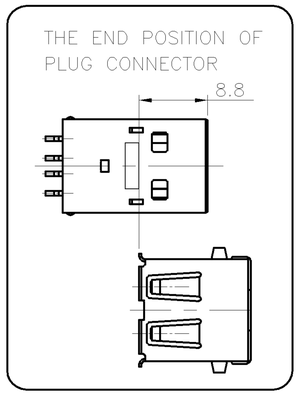

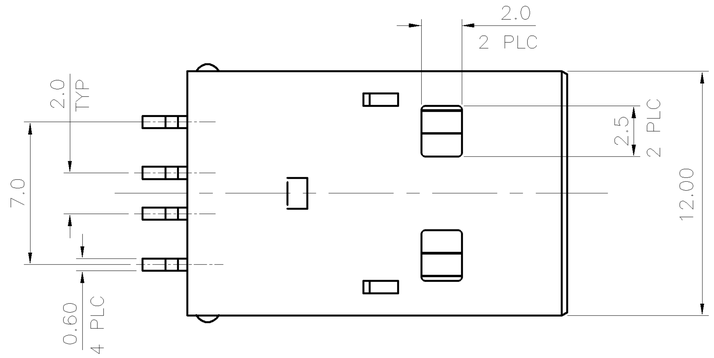

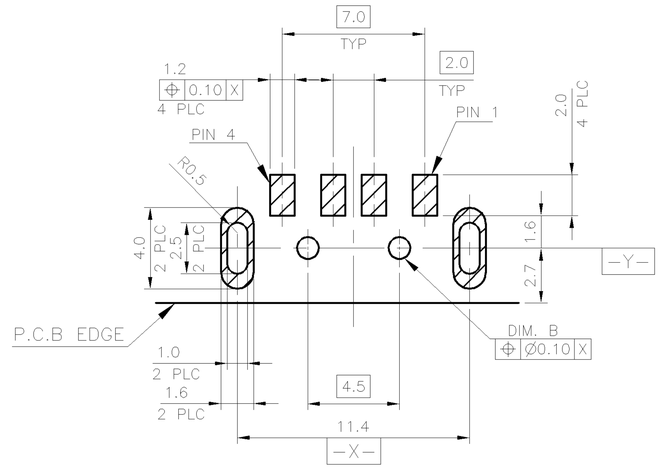

RECOMMENDED PCB LAYOUT (THICKNESS: 1.6mm)
(COMPONENT VIEW) TOLERANCE: 1PLC:±0.1 2PLC:±0.05

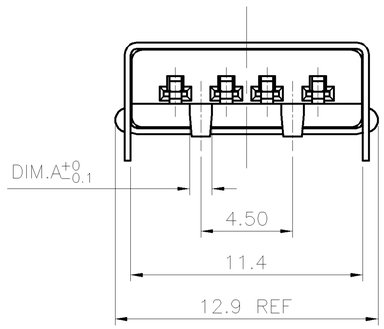

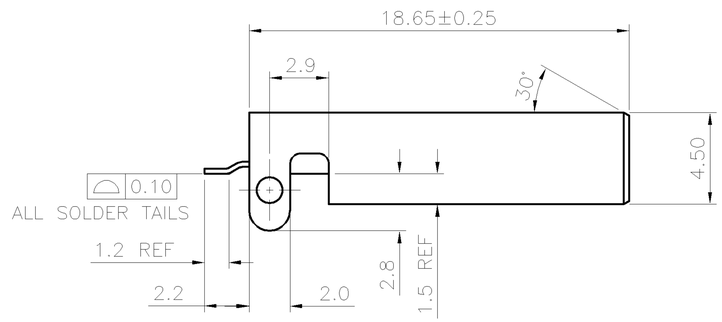

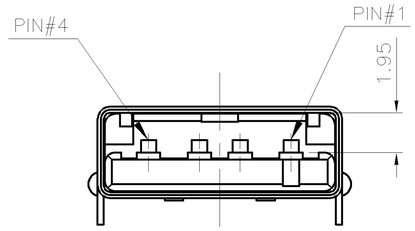

CIRCUITE NO.

NOTE:
1. MATERIAL:
   HOUSING: PA-6T WITH 30% GF, UL 94V-0 COLOR: SEE TABLE.
   CONTACT: BRASS.
   SHIELD: COLD ROLL STEEL, (SPCC-1).

2. FINISH:
   CONTACTS: GOLD FLASH OVER
   0.76um[30u"] MIN. PALLADIUM-NICKEL PLATING ON CONTACT AREA,
   2.54um[100u"] MIN. MATTE-TIN ON SOLDER TAILS.
   1.27um[50u"] MIN. NICKEL UNDERPLATED ALL OVER.
   SHELL: 3.048um[120u"] MIN. NICKEL PLATED OVER
   5.08um[200u"] MIN. Cu UNDERPLATED ALL OVER.

3. REFLOW SOLDER CAPABLE TO 260°C PER TE TEST SPEC. 109-201, CONDITION B.

4 OBSOLETE PARTS: OBSOLETE CIS STREAMLINING PER D.RENAUD/D.SINISI

OBSOLETE 5	REEL	ø1.40	ø1.50	BLACK	1-1734028-4
		ø1.00	ø1.10	BLACK	1-1734028-3
		ø1.40	ø1.50	NATURE	1-1734028-2
		ø1.00	ø1.10	NATURE	1-1734028-1
	TRAY	ø1.40	ø1.50	BLACK	~~1734028-4~~
		ø1.00	ø1.10	BLACK	~~1734028-3~~
		ø1.40	ø1.50	NATURE	~~1734028-2~~
		ø1.00	ø1.10	NATURE	1734028-1
	PACKING	DIM. A	DIM.B(PCB)	HSG. COLOR	PART NUMBER

THIS DRAWING IS A CONTROLLED DOCUMENT.

DIMENSIONS: MM

TOLERANCES UNLESS OTHERWISE SPECIFIED:

0 PLC	± 0.40
1 PLC	± 0.30
2 PLC	± 0.20
3 PLC	± 0.10
4 PLC	± -
ANGLES	± 3.0°

MATERIAL: SEE NOTE

FINISH: SEE NOTE

DWN	F. YANG	24DEC2008
CHK	S. CHIEN	24DEC2008
APVD	W. KODAMA	24DEC2008

PRODUCT SPEC: 108-57306

QUALIFICATION TEST REPORT: 501-57337

WEIGHT: --

TE Connectivity

NAME: USB CONNECTOR, PLUG, R/A, SMT TYPE

SIZE	CAGE CODE	DRAWING NO	RESTRICTED TO
A3	00779	C-1734028	—

CUSTOMER DRAWING

SCALE	SHEET	REV
—	1 OF 3	C

THIS DRAWING IS UNPUBLISHED. RELEASED FOR PUBLICATION -,- .
© COPYRIGHT - BY TYCO ELECTRONICS CORPORATION. ALL RIGHTS RESERVED.

LOC	DIST
DW	—

REVISIONS

P	LTR	DESCRIPTION	DATE	DWN	APVD
		SEE SHEET 1.			

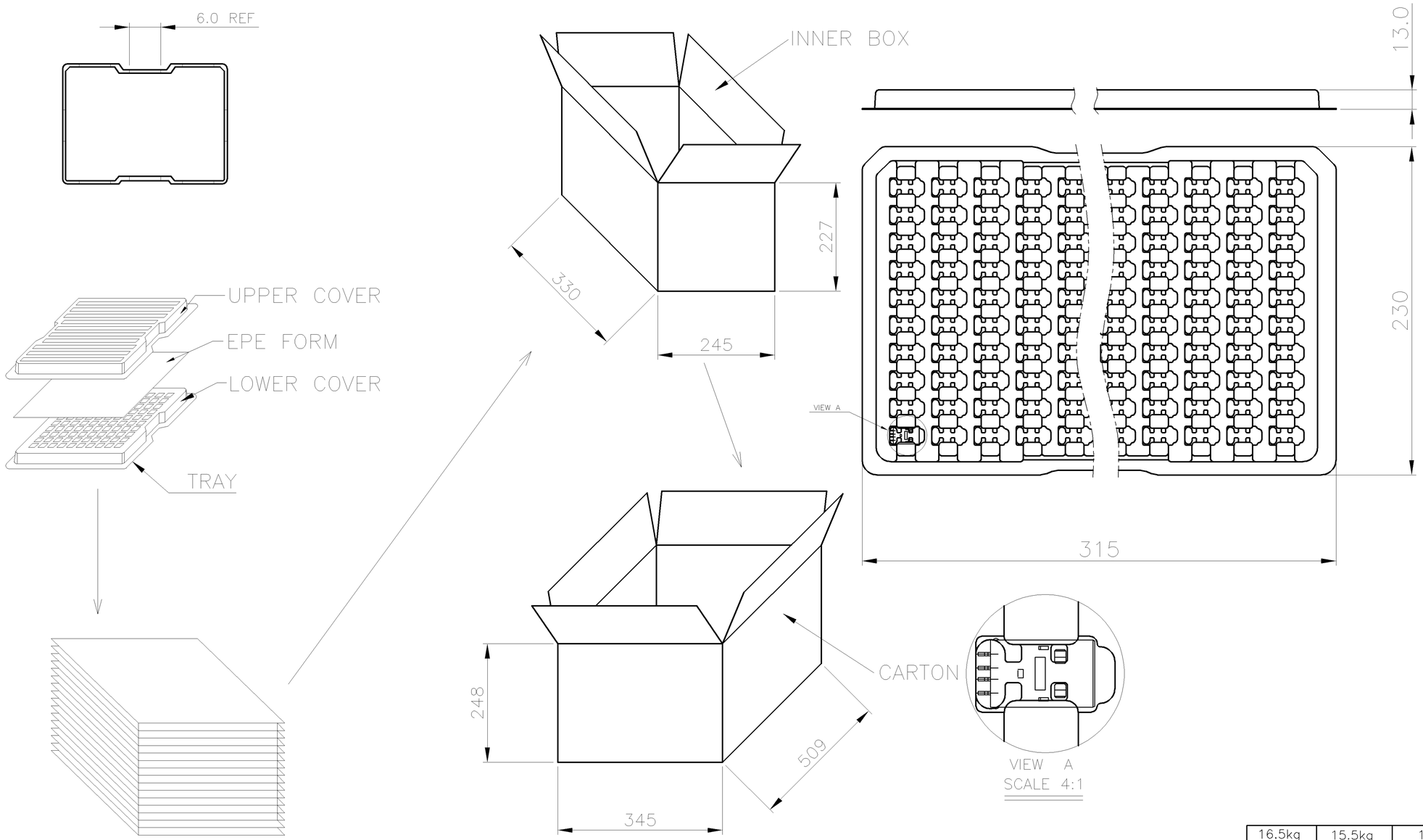

GROSS WEIGHT	NET WEIGHT	PCS/TRAY	TRAYS /CARTON	QUANTITY
16.5kg	15.5kg	100	32	3200PCS

THIS DRAWING IS A CONTROLLED DOCUMENT.

DIMENSIONS: MM

TOLERANCES UNLESS OTHERWISE SPECIFIED:
0 PLC ± –
1 PLC ± –
2 PLC ± –
3 PLC ± –
4 PLC ± –
ANGLES ± –

MATERIAL –

FINISH –

DWN
CHK
APVD
PRODUCT SPEC —
APPLICATION SPEC —
WEIGHT —

CUSTOMER DRAWING

TE Connectivity

NAME
USB CONNECTOR, PLUG, R/A, SMT TYPE

SIZE	CAGE CODE	DRAWING NO	RESTRICTED TO
A3	00779	C-1734028	—

SCALE	SHEET	REV
—	2 OF 3	C

THIS DRAWING IS UNPUBLISHED. RELEASED FOR PUBLICATION -,- .
© COPYRIGHT - BY TYCO ELECTRONICS CORPORATION. ALL RIGHTS RESERVED.

LOC	DIST
DW	—

REVISIONS

P	LTR	DESCRIPTION	DATE	DWN	APVD
		SEE SHEET 1.			

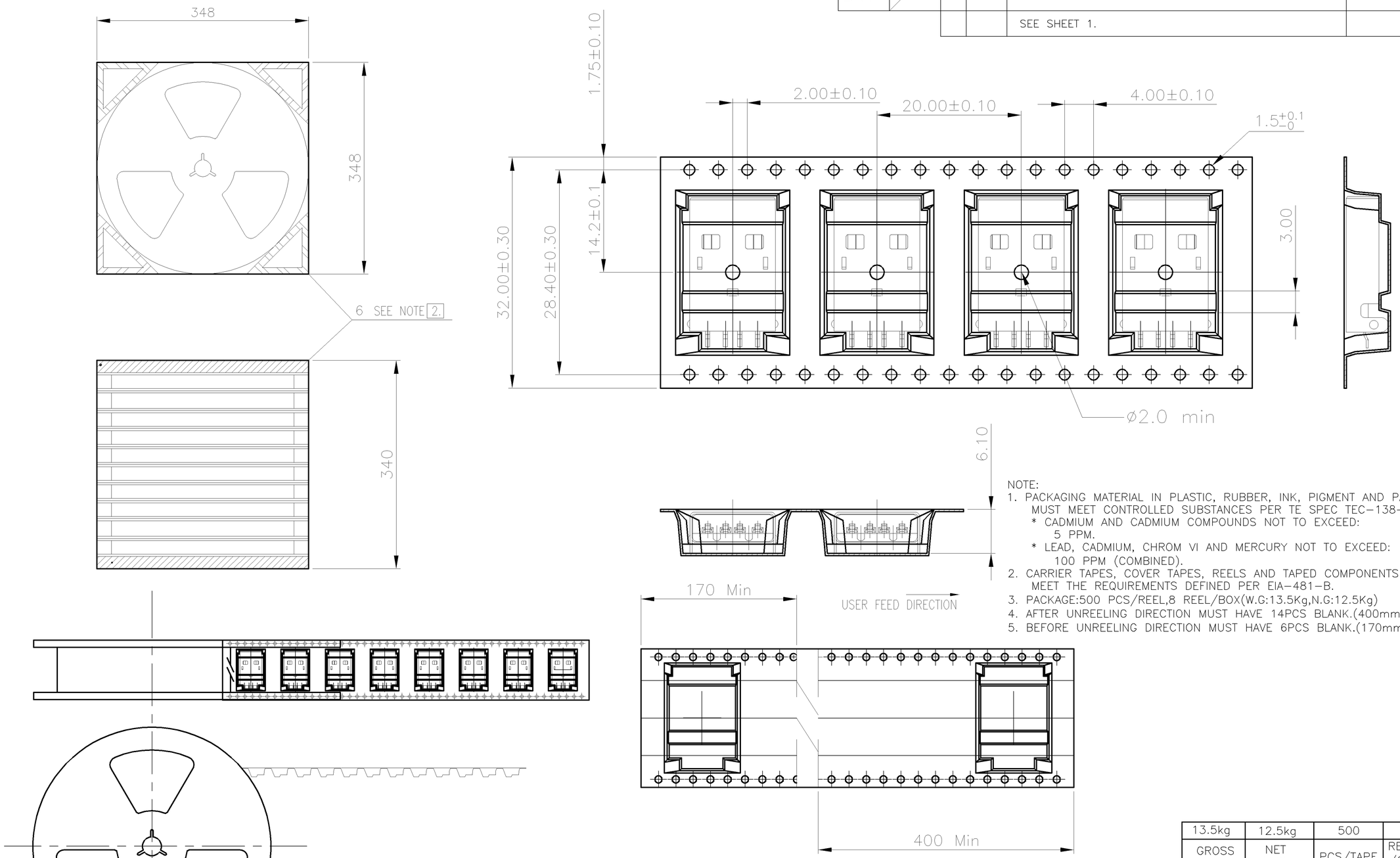

NOTE:
1. PACKAGING MATERIAL IN PLASTIC, RUBBER, INK, PIGMENT AND PAINT MUST MEET CONTROLLED SUBSTANCES PER TE SPEC TEC-138-702.
   * CADMIUM AND CADMIUM COMPOUNDS NOT TO EXCEED: 5 PPM.
   * LEAD, CADMIUM, CHROM VI AND MERCURY NOT TO EXCEED: 100 PPM (COMBINED).
2. CARRIER TAPES, COVER TAPES, REELS AND TAPED COMPONENTS MUST MEET THE REQUIREMENTS DEFINED PER EIA-481-B.
3. PACKAGE:500 PCS/REEL,8 REEL/BOX(W.G:13.5Kg,N.G:12.5Kg)
4. AFTER UNREELING DIRECTION MUST HAVE 14PCS BLANK.(400mm Min.)
5. BEFORE UNREELING DIRECTION MUST HAVE 6PCS BLANK.(170mm Min.)

GROSS WEIGHT	NET WEIGHT	PCS/TAPE	REEL /CARTON	QUANTITY
13.5kg	12.5kg	500	8	4000PCS

THIS DRAWING IS A CONTROLLED DOCUMENT.

DIMENSIONS: MM

TOLERANCES UNLESS OTHERWISE SPECIFIED:
0 PLC ± –
1 PLC ± –
2 PLC ± –
3 PLC ± –
4 PLC ± –
ANGLES ± –

MATERIAL –
FINISH –

DWN
CHK
APVD
PRODUCT SPEC —
APPLICATION SPEC —
WEIGHT —

TE Connectivity

NAME
USB CONNECTOR, PLUG, R/A, SMT TYPE

SIZE	CAGE CODE	DRAWING NO	RESTRICTED TO
A3	00779	C-1734028	—

CUSTOMER DRAWING | SCALE — | SHEET 3 OF 3 | REV C

Mouser Electronics

Authorized Distributor

Click to View Pricing, Inventory, Delivery & Lifecycle Information:

TE Connectivity:

1-1734028-3