THIS DRAWING IS UNPUBLISHED. RELEASED FOR PUBLICATION 2011
© COPYRIGHT 2011 - ALL RIGHTS RESERVED.

LOC	DIST
AI	-

REVISIONS

P	LTR	DESCRIPTION	DATE	DWN	APVD
	B1	DIM "B" ADDED	05DEC2014	PS	JK

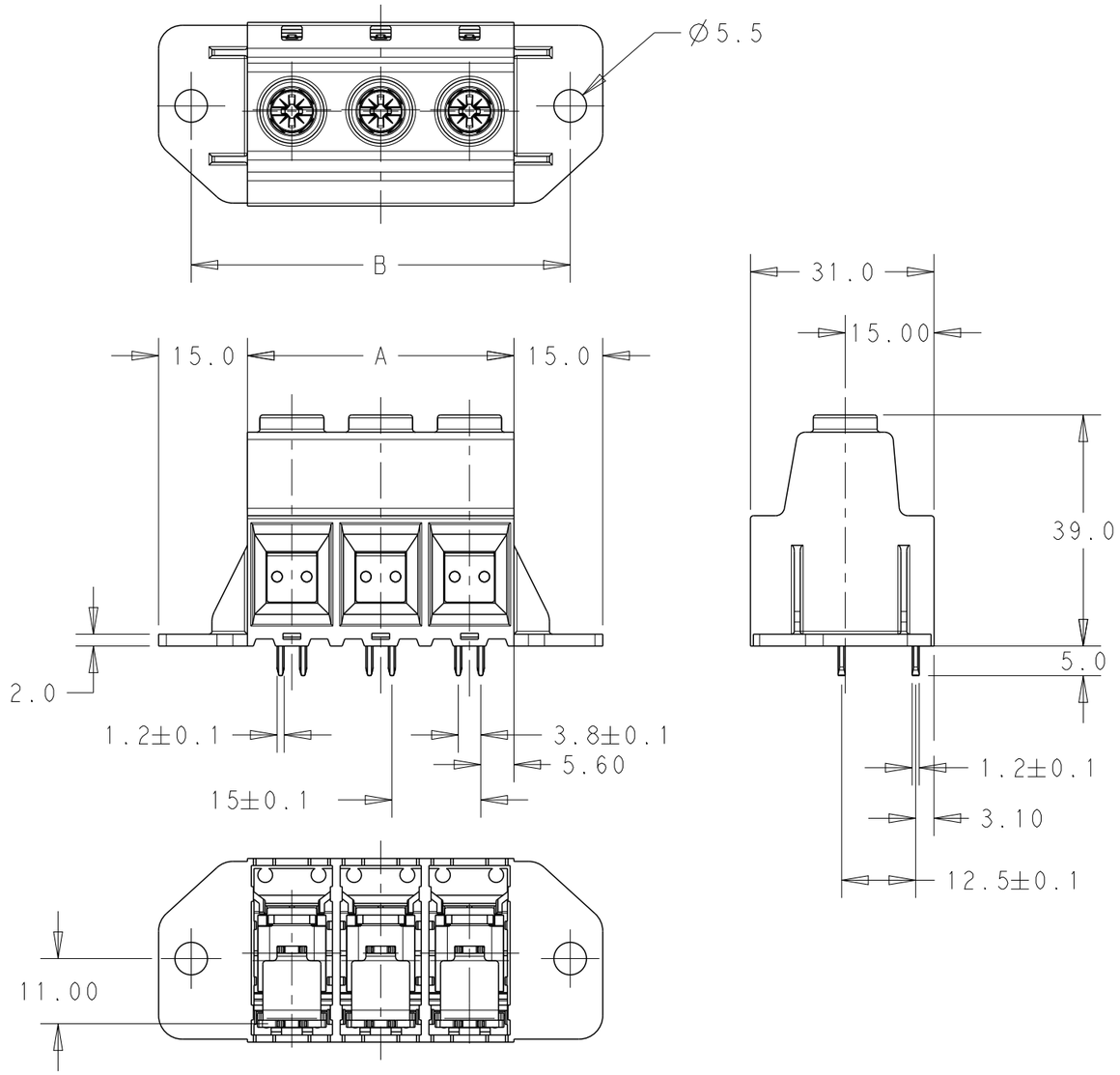

NOTES:

1. MATERIALS:
   HOUSING-PA66, UL94 VO, COLOR-GREEN
   SCREW- M5, STEEL, NICKEL PLATED
   CLAMP- STEEL,NICKEL PLATED
   CONTACT PIN- BRASS, TIN PLATED

2. MECHANICAL:
   PCB THICKNESS-2.40 MAX
   PCB HOLE DIAMETER-1.60 MIN
   STRIP LENGTH-18 mm
   OPERATING TEMPERATURE:-40°C TO +110°C
   RECOMMENDED/HIGHEST TIGHTENING TORQUE-2.1/2.5 Nm.

3. ELECTRICAL:
   WIRE RANGE- 20 TO 1 AWG
   VOLTAGE RATING- 600 VOLTS
   CURRENT RATING-130 A FIELD WIRING;135A FACTORY WIRING
   CONTACT RESISTANCE-15 mOHM MAX
   INSULATION RESISTANCE-10^9 OHMS MIN (500V DC)

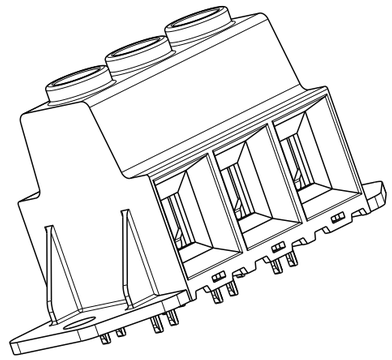

SCALE 1:1
-3 AS SHOWN

199.00	180.00	12	1-1986715-2
184.00	165.00	11	1-1986715-1
169.00	150.00	10	1-1986715-0
154.00	135.00	9	1986715-9
139.00	120.00	8	1986715-8
124.00	105.00	7	1986715-7
109.00	90.00	6	1986715-6
94.00	75.00	5	1986715-5
79.00	60.00	4	1986715-4
64.00	45.00	3	1986715-3
49.00	30.00	2	1986715-2
DIM "B"	DIM "A"	POLE	PART NUMBER

RECOMMENDED PCB LAYOUY

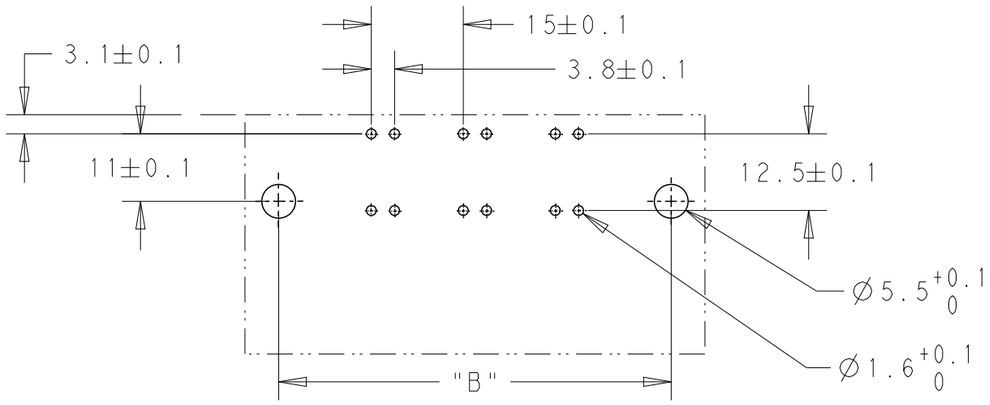

THIS DRAWING IS A CONTROLLED DOCUMENT.

DIMENSIONS: mm

TOLERANCES UNLESS OTHERWISE SPECIFIED:
0 PLC ±-
1 PLC ±0.25
2 PLC ±0.20
3 PLC ±-
4 PLC ±-
ANGLES ±1°

MATERIAL -
FINISH -

DWN RAGHAVENDRA 13SEP2011
CHK SARVER MICHAEL 13SEP2011
APVD SARVER MICHAEL 13SEP2011
PRODUCT SPEC -
APPLICATION SPEC -
WEIGHT -

TE Connectivity

NAME POWER TERMINAL BLOCK, DOUBLE PIN
MOUNTING FLANGES; PITCH 15.00 mm

SIZE	CAGE CODE	DRAWING NO	RESTRICTED TO
A3	00779	C-1986715	-

Customer Drawing | SCALE 1:1 | SHEET 1 OF 1 | REV B1

1470-19 (3/11)

Mouser Electronics

Authorized Distributor

Click to View Pricing, Inventory, Delivery & Lifecycle Information:

TE Connectivity:

1-1986715-1