THIS DRAWING IS UNPUBLISHED. RELEASED FOR PUBLICATION -
© COPYRIGHT - TE CONNECTIVITY ALL RIGHTS RESERVED.

LOC	DIST
IR	-

REVISIONS

P	LTR	DESCRIPTION	DATE	DWN	APVD
	Y	HOUSING RIB STRENGTHENNED,RAW MATERIAL CHANGED TO PA4T	06JAN2012	PS	RRP
	Z	ECO-16-001320	14JUN2016	AD	SH

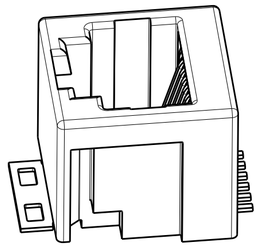

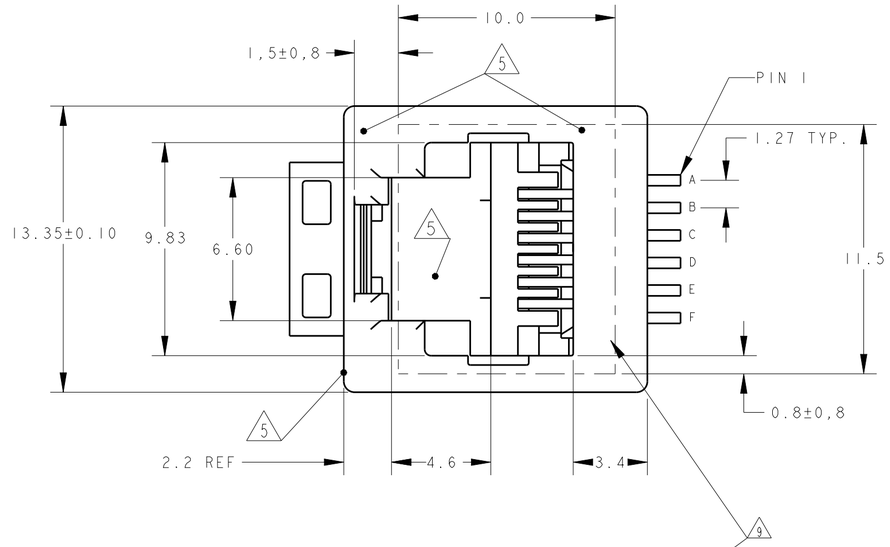

NOTES:

1 TOLERANCES UNLESS OTHERWISE SPECIFIED: ±0.15.

2 CONTACT PLATING:
OVERALL: Ni 1.27µm MIN. ALL OVER THE CONTACTS
SOLDER ZONE: Sn 3.5-5.0µm ON THE SOLDER ZONE OF THE CONTACT
MATING ZONE: PLATING CONFIRMS TO PRODUCT REQUIREMENTS
AS PER SPECIFICATION 108-19117

3 MATERIALS:
HOUSING: 30% G.F. LCP, COLOR BLACK, UL 94V-0.
CONTACTS: PHOSPHOR BRONZE
SOLDER BRACKET: TINPLATED BRASS WITH NICKEL UNDERPLATE.

4 THIS JACK CAN ALSO BE APPLIED HANGING THROUGH A HOLE, IN A PRINTED CIRCUIT BOARD. SEE LEFT PCB LAYOUT.

5 SURFACE CAN BE USED FOR PICKING THE MODULAR JACK WITH, TYPE II SMD MACHINE.

6 ON 1-338086-4 AND 2-338086-4 ONLY CONTACTS B,C,D & E ARE INSTALLED.

7 COPLANARITY MEASURED AT HEEL OF CONTACTS
COPLANARITY AT TIPS OF CONTACTS MAX. 0.18 mm

8 TAPE AND REEL PACKAGING ACCORDING TO EIA 481-3 SPECIFICATIONS.

9 INCLUDES KAPTON TAPE (10x11,5mm) ON TOP SURFACE AS PICK AND PLACE FEATURE.

10 OBSOLETE PARTS: OBSOLETE CIS STREAMLINIG PER D. RENAUD/D.SINSI

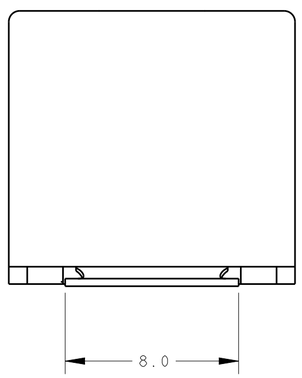

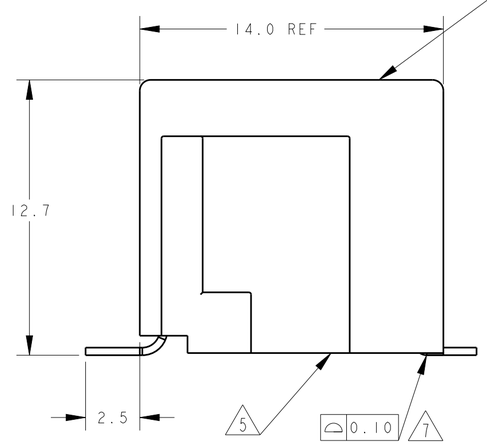

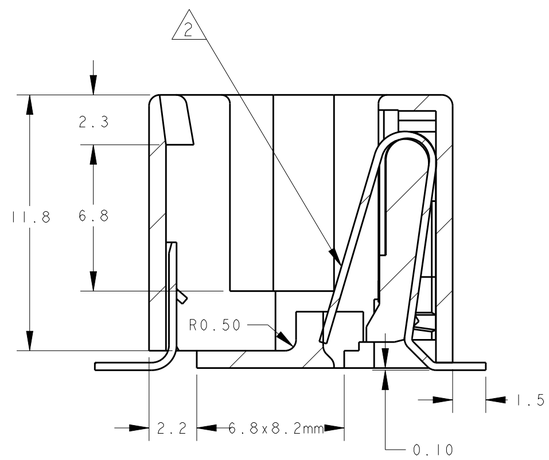

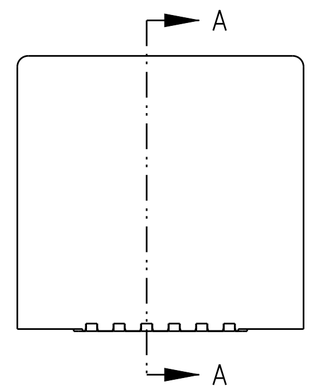

SECTION A - A

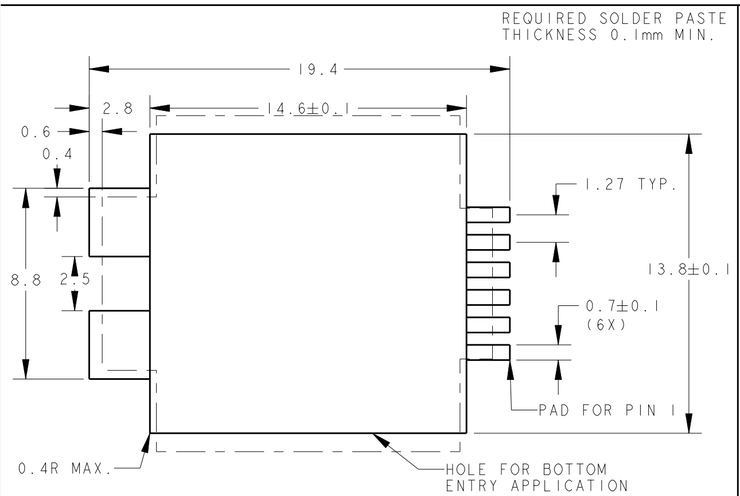

PRINTED CIRCUIT BOARD LAYOUT (BOTTOM ENTRY APPL.)

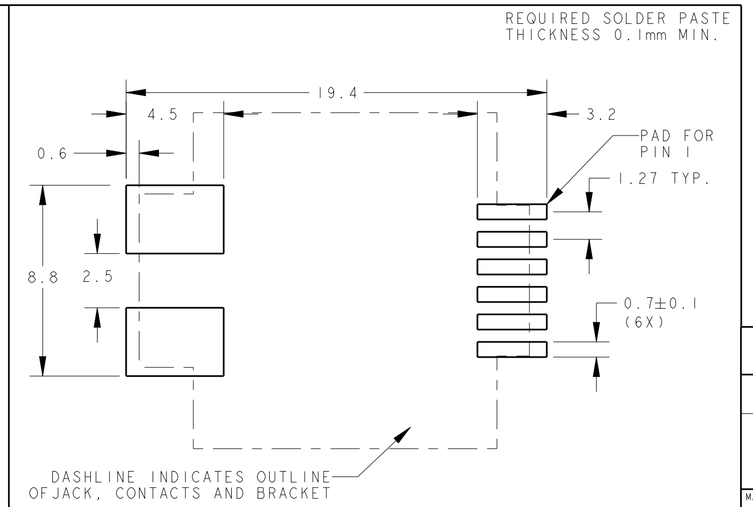

PRINTED CIRCUIT BOARD LAYOUT (TOP ENTRY APPL.)

OBSOLETE 10	~~6 POS./6 CONT.~~	~~750 PCS ON Ø560mm OD REEL. BOTTOM ENTRY ORIENTATION PER DETAIL B2~~	~~2-338086-5~~
	6 POS./4 CONT.	750 PCS ON Ø560mm OD REEL. TOP ENTRY ORIENTATION PER DETAIL B1	2-338086-4 6
	6 POS./6 CONT.		2-338086-3
	6 POS./4 CONT.	300 PCS ON Ø360mm OD REEL. TOP ENTRY ORIENTATION PER DETAIL B1	1-338086-7 9
	6 POS./6 CONT.		1-338086-6 9
	6 POS./6 CONT.	300 PCS ON Ø360mm OD REEL. BOTTOM ENTRY ORIENTATION PER DETAIL B2	1-338086-5
	6 POS./4 CONT.	300 PCS ON Ø360mm OD REEL. TOP ENTRY ORIENTATION PER DETAIL B1	1-338086-4 6
	6 POS./6 CONT.		1-338086-3
	REMARKS	PACKAGING 8	PART NUMBER

THIS DRAWING IS A CONTROLLED DOCUMENT.

DIMENSIONS: mm

TOLERANCES UNLESS OTHERWISE SPECIFIED:
0 PLC ±-
1 PLC ±-
2 PLC ±-
3 PLC ±-
4 PLC ±-
ANGLES ±-

MATERIAL: SEE NOTE 3
FINISH: SEE NOTE 2

DWN: E.v.EIJK 22-Nov-96
CHK: E.STELLINGA dEC-96
APVD: R.SMEETS
PRODUCT SPEC: 108-19117
APPLICATION SPEC: 114-19041
WEIGHT: -

TE Connectivity

NAME: INVERTIBLE MODULAR JACK ASSEMBLY SURFACE MOUNT APPLICATION 6/6 AND 6/4 POSITION LINE

SIZE	CAGE CODE	DRAWING NO	RESTRICTED TO
A2	00779	C-338086	-

CUSTOMER DRAWING | SCALE 1:1 | SHEET 1 OF 2 | REV Z

THIS DRAWING IS UNPUBLISHED. RELEASED FOR PUBLICATION -
© COPYRIGHT - TE CONNECTIVITY ALL RIGHTS RESERVED.

LOC	DIST
1R	-

REVISIONS

P	LTR	DESCRIPTION	DATE	DWN	APVD
	-	SEE SHEET 1	-	-	-

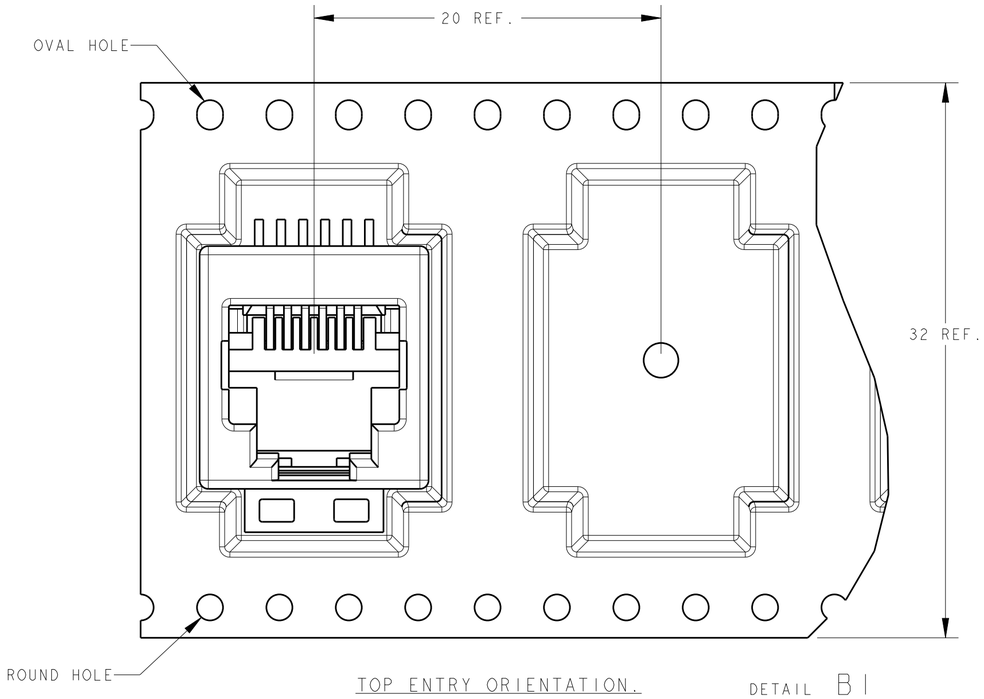

TOP ENTRY ORIENTATION.

DETAIL B1
SCALE 4:1

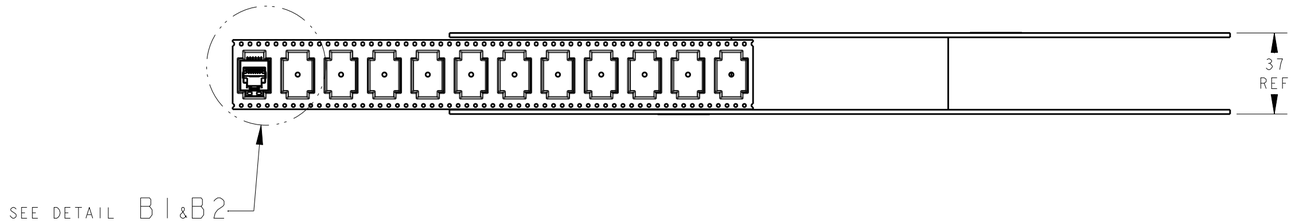

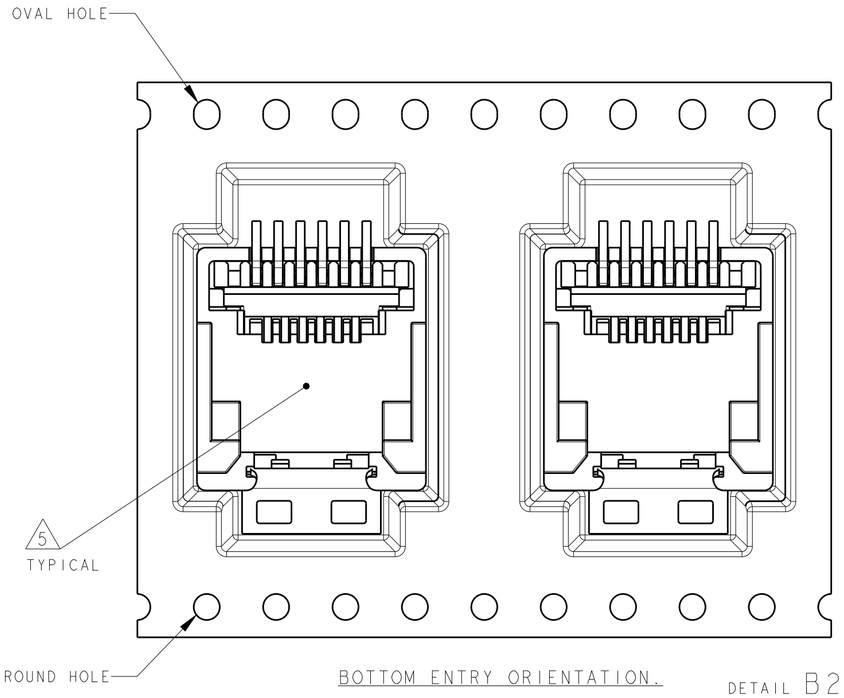

BOTTOM ENTRY ORIENTATION.

DETAIL B2
SCALE 4:1

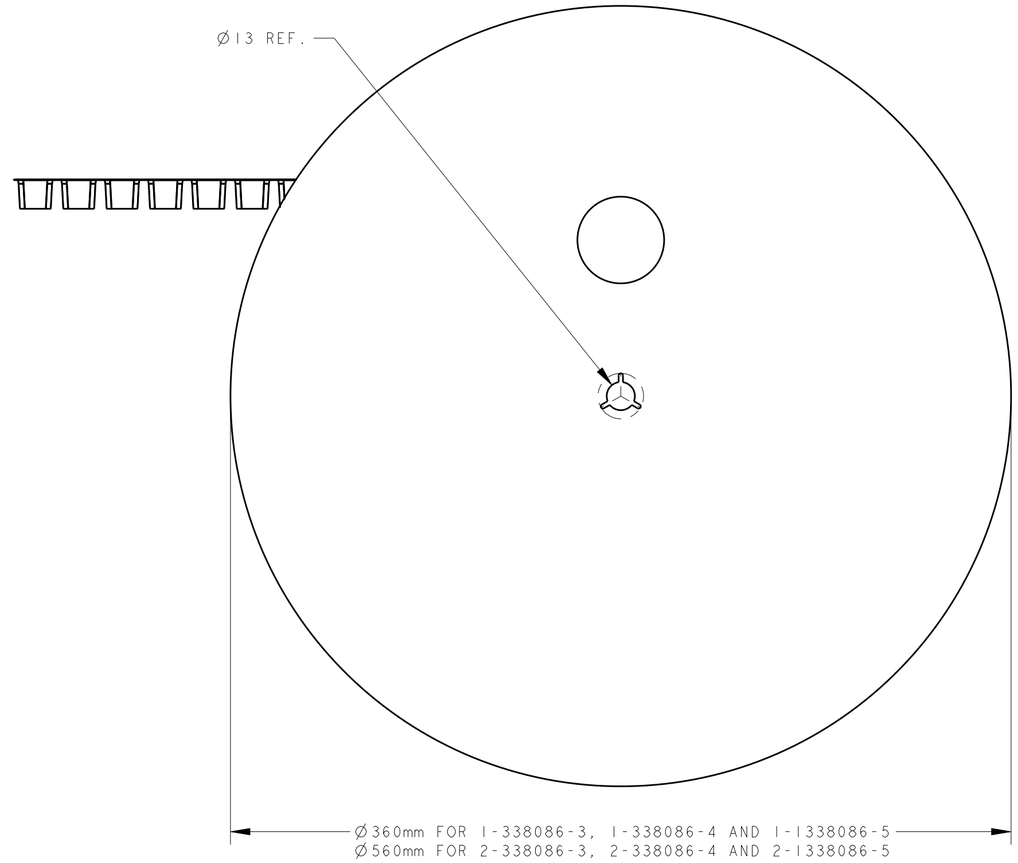

THIS DRAWING IS A CONTROLLED DOCUMENT.

DIMENSIONS: mm

TOLERANCES UNLESS OTHERWISE SPECIFIED:
0 PLC ±-
1 PLC ±-
2 PLC ±-
3 PLC ±-
4 PLC ±-
ANGLES ±-

MATERIAL -
FINISH -

DWN E.v.EIJK 22-Nov-96
CHK E.STELLINGA dEC-96
APVD R.SMEETS -
PRODUCT SPEC 108-19117
APPLICATION SPEC 114-19041
WEIGHT -

TE Connectivity

NAME INVERTIBLE MODULAR JACK ASSEMBLY
SURFACE MOUNT APPLICATION
6/6 AND 6/4 POSITION LINE

SIZE	CAGE CODE	DRAWING NO	RESTRICTED TO
A2	00779	C-338086	-

CUSTOMER DRAWING | SCALE 1:2 | SHEET 2 OF 2 | REV Z

Mouser Electronics

Authorized Distributor

Click to View Pricing, Inventory, Delivery & Lifecycle Information:

TE Connectivity:

1-338086-7