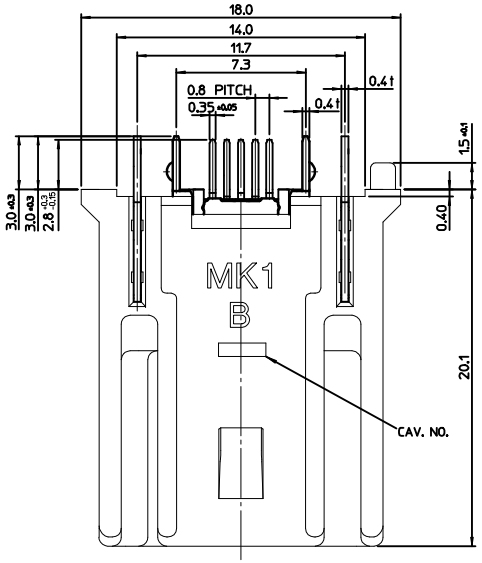

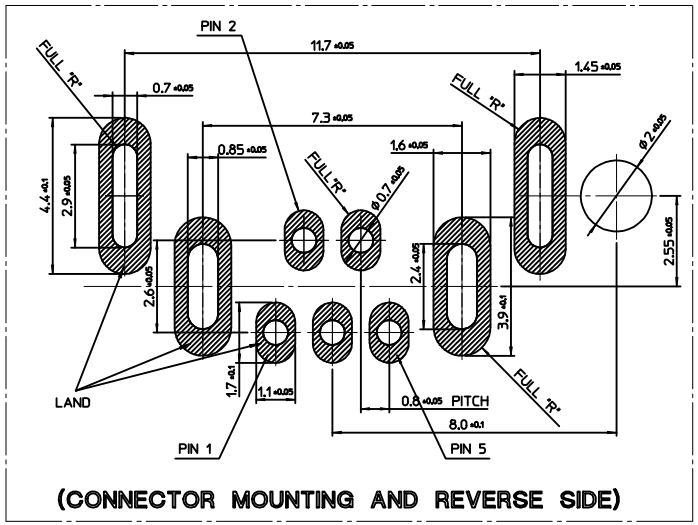

(CONNECTOR MOUNTING AND REVERSE SIDE)

RECOMMENDED PCB LAYOUT

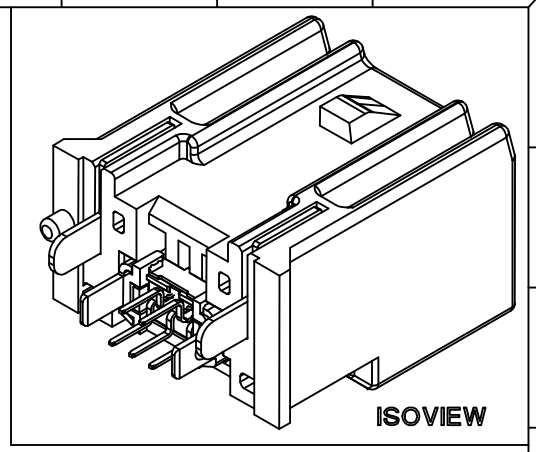

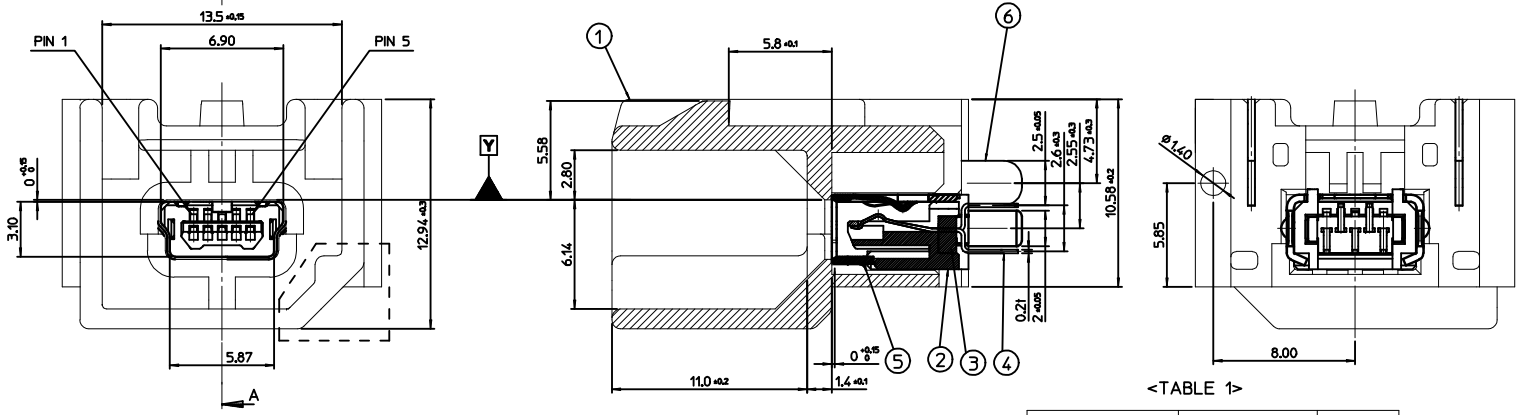

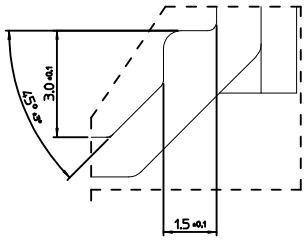

<TABLE 1>

MATERIAL NO.	ORDER NO.	COLOR
1040040905	104004-0905	GRAY

<PARTS LIST>

NO.	PART NAME	MATERIAL
1	SHROUD-B	LCP, GLASS FILLED, UL94 V-0
2	RECEPTACLE HOUSING	LCP, GLASS FILLED, UL94 V-0
3	CONTACT HOUSING	LCP, GLASS FILLED, UL94 V-0
4	CONTACT TERMINAL	COPPER ALLOY
5	SHIELD CASE	PHOSPHOR BRONZE
6	BOARD LOCKS PIN	BRASS

NOTE

1. MATES WITH :
   (MOLEX SERIES NO. - 111014, 111015, 111005, 111041, 111019, 111020)
2. SHROUD GEOMETRY AND ASSEMBLY WITH USB MINI-B CONNECTOR ARE ACCORDING TO USCAR STD 999-U-USB-Z01
3. FINISHES
   - TERMINAL :
     CONTACT AREA : Au 0.75μm MIN.
     A1 SOLDER TAIL AREA : TIN 3.8μm MIN.
     UNDER PLATING : NI 1.0μm MIN.
   - SHIELD CASE :
     3.0μm MIN. TIN OVER NI 1.0μm MIN.
   - FITTING NAIL :
     3.0μm MIN. TIN OVER NI 1.0μm MIN.
4. UNLESS OTHERWISE SPECIFIED, TYPICAL RECOMMENDED PCB MANUFACTURING TOLERANCE IS ±0.05
5. PACKAGING IS TRAY :
   (48 PCS/TRAY, 5 TRAY/TRAY BOX, 240 PCS/TRAY BOX, 960 PCS/CARTON BOX)
6. PRODUCT SPECIFICATION : PS-49616-001
7. PACKAGING INFORMATION : PK-104004-003
8. PCB THICKNESS : 2.36mm(REFERENCE)

REVISED
EC NO: KTR2015-0098 2015/04/27
DRWN:YIBAEK
CHKD:
APPR: JYCHOI 2015/05/04
DESCRIPTION
REV
A1

QUALITY SYMBOLS
▼=0
Ⓒ=0

GENERAL TOLERANCES (UNLESS SPECIFIED)

	mm	INCH
4 PLACES	± ---	± ---
3 PLACES	± 0	± ---
2 PLACES	± 0.15	± ---
1 PLACE	± 0.25	± ---
ANGULAR ± 1 °		

DRAFT WHERE APPLICABLE MUST REMAIN WITHIN DIMENSIONS

DIMENSION STYLE: MM ONLY	SCALE: 5:1	DESIGN UNITS: METRIC	THIRD ANGLE PROJECTION
DRAWN BY: S.M.KIM	DATE: 2009/06/17	TITLE: USCAR USB MINI B CONN VERTICAL B (LONG TERMINAL VERSION)	
CHECKED BY: B.C.YOON	DATE: 2009/06/17		
APPROVED BY: JYCHOI	DATE: 2013/01/07	molex MOLEX INCORPORATED	
MATERIAL NO.: SEE TABLE 1		DOCUMENT NO.: SD-104004-007	SHEET NO.: 1 OF 1
SIZE: A2	THIS DRAWING CONTAINS INFORMATION THAT IS PROPRIETARY TO MOLEX INCORPORATED AND SHOULD NOT BE USED WITHOUT WRITTEN PERMISSION		

tb_frame_A2_P_ME_T
Rev. E 2006/04/15

Mouser Electronics

Authorized Distributor

Click to View Pricing, Inventory, Delivery & Lifecycle Information:

Molex:
104004-0905