REVISIONS			
REV	DESCRIPTION	DATE	APPROVED
01_2	REVISED	7/16/96	DPG 7/29/96

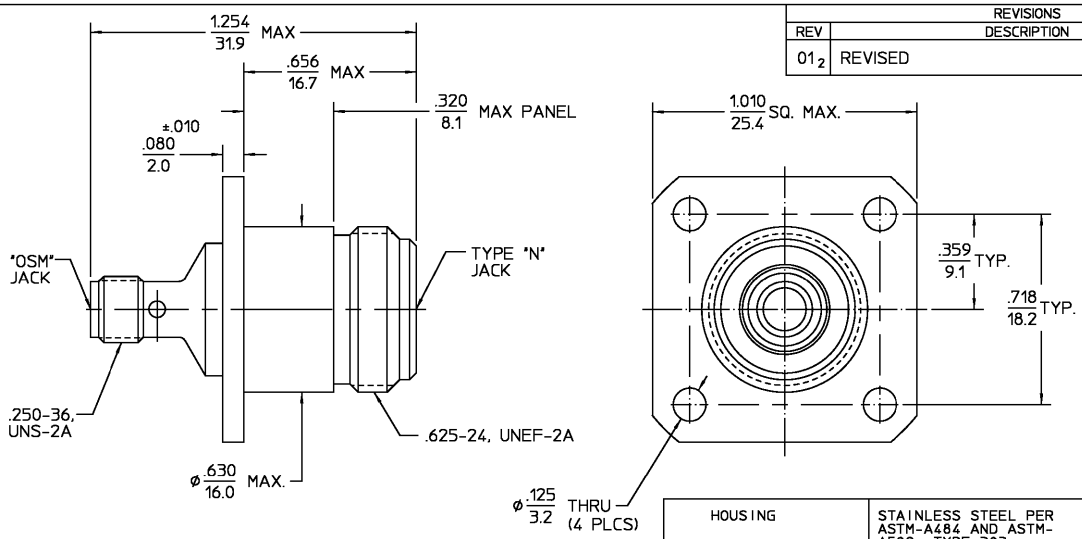

COMPONENT	MATERIAL	FINISH
HOUSING	STAINLESS STEEL PER ASTM-A484 AND ASTM-A582, TYPE 303	PASSIVATE PER QQ-P-35
DIELECTRIC	TFE FLUOROCARBON PER ASTM-D-1457	N/A
CENTER CONTACT	BERYLLIUM COPPER PER ASTM-B-196 OR ASTM-B-197, ALLOY C17300, CONDITION H	GOLD PLATE PER MIL-G-45204

NOTES:
1. CAPTURED CENTER CONTACT

.XXX = in
XX.X = mm (REF)

UNLESS OTHERWISE SPECIFIED DIMENSIONS ARE IN INCHES

FRAC. ± 1/64 DEC. ±.005 ANGLES ± 1°

DRAWN BY S.A. DATE 6/15/90
CHECKED BY
APP'D BY B.C. 8/8/90

AMP Incorporated
140 Fourth Avenue
Waltham, MA 02451-7599

These drawings and specifications are the property of M/A COM Interconnect Div. and shall not be reproduced or copied or used in whole or in part as the basis for the manufacture or sale of item(s) without written permission.

USE ASS'Y PROCEDURE

NO. A.P. N/A

TITLE "OSM" JACK TO TYPE "N" JACK ADAPTER-4 HOLE FLANGE MOUNT

SIZE	CODE IDENT NO.		REV
B	26805	3080-4019-02	01_2
SCALE 3:1			SHEET 1 OF 1

CUSTOMER DRAWING

AMP PART # 1057359-1
SHEET 1 OF 1 REV A

Downloaded from Elcodis.com electronic components distributor