106273

JUMPER P/N	LENGTH L
106273-0525	1.0 $^{+0.2}_{-0}$
106273-0526	2.0 $^{+0.2}_{-0}$
106273-0527	3.0 $^{+0.2}_{-0}$
106273-0528	5.0 $^{+0.2}_{-0}$
106273-0529	10.0 $^{+0.3}_{-0}$
106273-0693	13.0 $^{+0.3}_{-0}$
106273-0708	15.0 $^{+0.3}_{-0}$
106273-0554	20.0 $^{+0.4}_{-0}$
106273-0709	25.0 $^{+0.5}_{-0}$
106273-0683	30.0 $^{+0.6}_{-0}$

CONNECTIONS	
FROM	TO
P1-A	P2-B
P1-B	P2-A

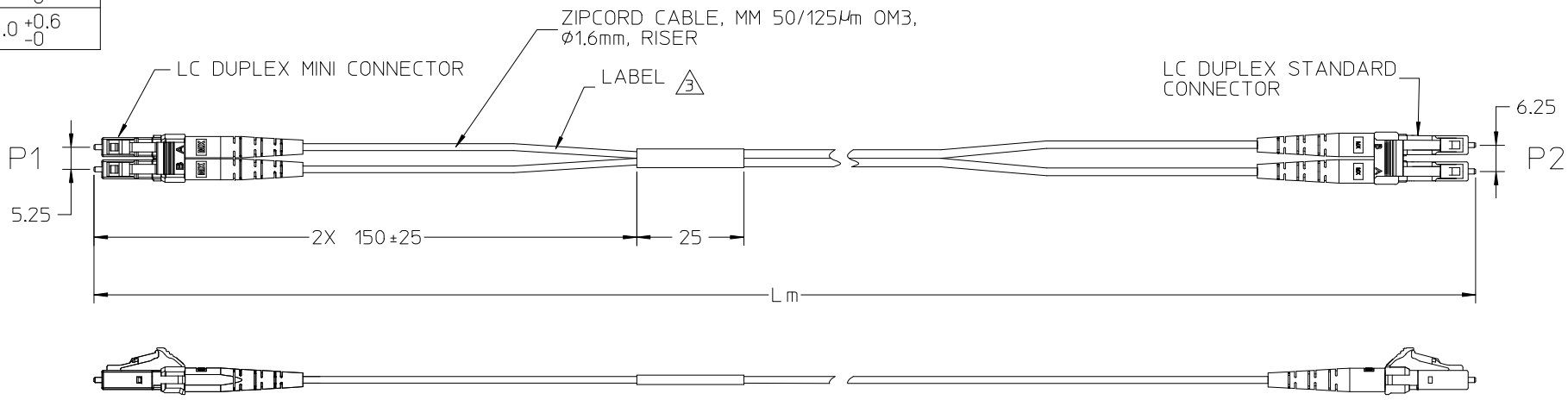

NOTES:

1. DUST CAPS ARE NOT SHOWN BUT INCLUDED.

2. MAXIMUM INSERTION LOSS PER CONNECTOR AT 850nm - 0.35dB.

3. LABEL IS PRINTED WITH MOLEX P/N AND SERIAL NUMBER. TEST DATA PER CONNECTOR IS SUPPLIED WITH EACH SHIPMENT.

ENTER DESCRIPTION
EC NO: MF2013-0128
DRWN:KPEYZNER 2012/08/29
CH'KD:
APPR: IGUMIN 2012/08/31
DESCRIPTION
6
REV

QUALITY SYMBOLS
▼=0
Ⓒ=0

GENERAL TOLERANCES (UNLESS SPECIFIED)

	mm	INCH
4 PLACES	± ---	± ---
3 PLACES	± ---	± ---
2 PLACES	± ---	± ---
1 PLACE	± ---	± ---
0 PLACE	± ---	± ---

ANGULAR ±1/2°
DRAFT WHERE APPLICABLE MUST REMAIN WITHIN DIMENSIONS

DIMENSION STYLE: MM ONLY
SCALE: 1:1
DESIGN UNITS: INCH
THIRD ANGLE PROJECTION

DRAWN BY: IGUMIN DATE: 2009/08/05
CHECKED BY DATE
APPROVED BY DATE: 2009/08/05

TITLE: LCD MINI TO LCD JUMPER, MM 50/125 OM3

molex

MATERIAL NO.: SEE TABLE
DOCUMENT NO.: SD-106273-0525
SHEET NO.: 1 OF 1
SIZE: B

THIS DRAWING CONTAINS INFORMATION THAT IS PROPRIETARY TO MOLEX INCORPORATED AND SHOULD NOT BE USED WITHOUT WRITTEN PERMISSION