THIS DRAWING IS UNPUBLISHED. RELEASED FOR PUBLICATION 2012
© COPYRIGHT 2012 Tyco Electronics AMP GmbH ALL RIGHTS RESERVED.

LOC	DIST
A1	-

REVISIONS

P	LTR	DESCRIPTION	DATE	DWN	APVD
	A19	ECR-12-004218	05OCT2016	GCM	MKO

PN 0-2.0-3.0-8 & 1-2

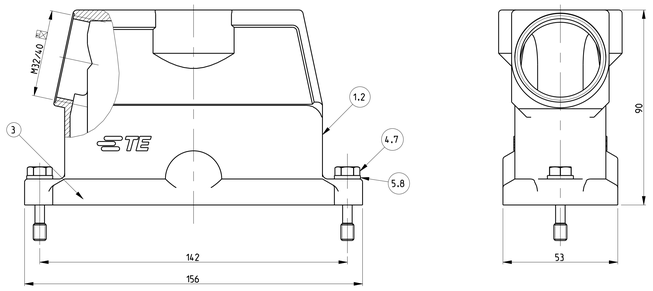

PN 0-9.1-0.1-1.1-4.1-8 & 1-9

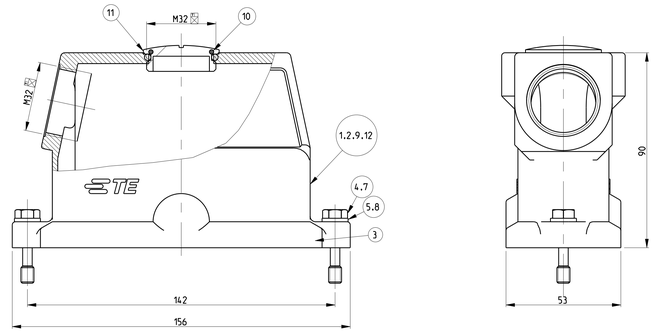

PN 0-7

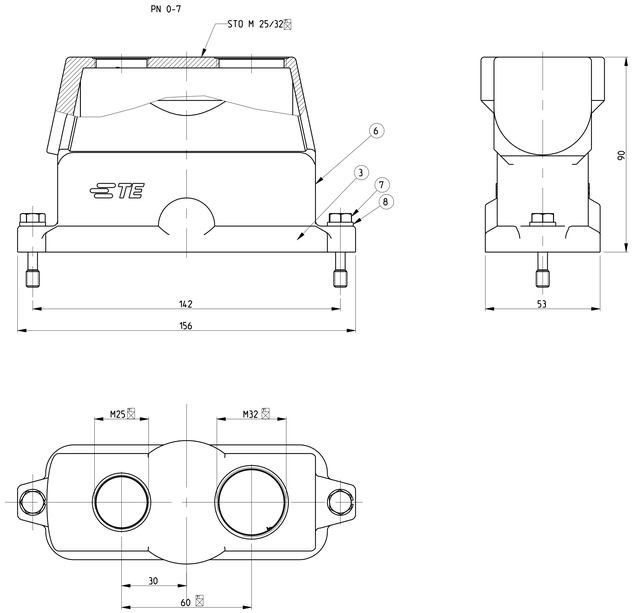

PN 0-1.0-4.0-5.0-6.1-3 & 1-6

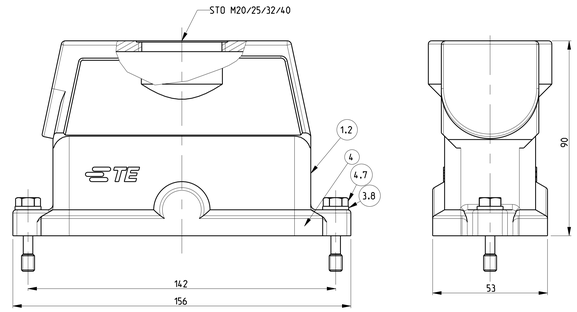

PN 1-5 & 1-7 (Neutral)

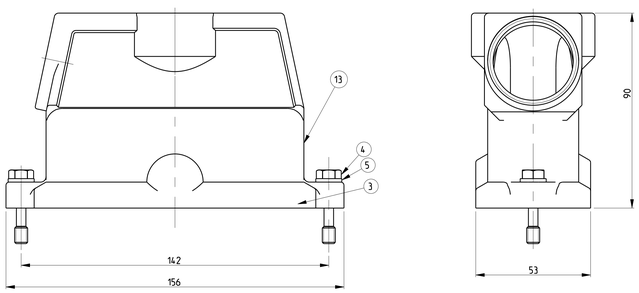

NOTES.

1. Material:Housing-Aluminium Diecasting Alloy
   Seals:Neoprene conductivity
2. Surface:Varnish grey
   -ChromitAL TCP passivation +Varnish Black
3. Packaging
   Quantity 5 Pieces in a box
4. Special Packaging
   Quantity 25 Pieces in a box
5. Varnish on the inside not necessarily

PN 0-1.0-4.0-5.0-6.1-3 & 1-6

SCALE 1:2

PN 1-2
With Weidmuller Logo

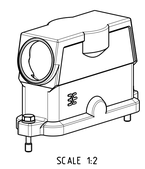

SCALE 1:2

PN 0-2.0-3.0-8 & 1-2

SCALE 1:2

PN 0-7

SCALE 1:2

PN 0-9.1-0.1-1.1-4.1-8 & 1-9

SCALE 1:2

PN 1-7.1-5 (Neutral)
Without logo

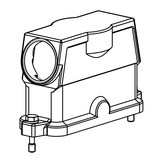

SCALE 1:2

1-9	1-8	1-7	1-6	1-5	1-4	1-3	1-2	1-1	1-0	0-9	0-8	0-7	0-6	0-5	0-4	0-3	0-2	0-1	DESCRIPTION	MATERIAL (1)	SURFACE (2)	COLOR	ITEM NO	REMARKS
		1		1															Hood size 8 finished product	Aluminium	SUR TEC 650	Black RAL9005	13	
					1														Hood size 8 finished product	Aluminium		Without varnish	12	
							1												Blanking Piece	Brass	Nickel plated	Blue	11	
							1												O-Ring	Neoprene		Black	10	
	1						1												Hood size 8 finished product	Aluminium		White Aluminium	9	
			2						2	2	2	2							Washer. Plain	Stainless steel	Blank		8	B6.4
			2						2	2	2	2							Screw. Hexagon Bolt	Stainless steel	Blank		7	M6x30
												1							Hood size 8 finished product	Aluminium	SUR TEC 650	Black RAL9005	6	
2	2	2		2	2	2	2	2					2	2	2	2	2	2	Washer. Plain	Stainless steel	Blank		5	B6.4
2	2	2		2	2	2	2	2					2	2	2	2	2	2	Screw. Hexagon Bolt	Stainless steel	Blank		4	M6x30
1	1	1	1	1	1	1	1	1	1	1	1	1	1	1	1	1	1	1	Seal	Neoprene		Black	3	Conductivity
1			1			1	1			1	1	1			1	1			Hood size 8 finished product	Aluminium	SUR TEC 650	Black RAL9005	2	
									1				1	1			1	1	Hood size 8 finished product	Aluminium		Grey RAL7001	1	
																			EMV.24/64.STO.1.M40.G					
																			EMV.24/64.STS.1.M40.G					
																			EMV-K.24/64.STS.1.M40.G					
																			EMV-K.24/64.STO.1.M40.G					
																			EMV.24/64.STO.1.M20.G					
																			EMV.24/64.STO.1.M25.G					
																			EMV-K.24/64.STO.1.M25.G+1.M32.G					
																			EMV-K.24/64.STS.1.M32.G					
																			EMV-K.24/64.STO.1.M32.G+STS.1.M32.G					
																			EMV.24/64.STO.1.M32.G+STS.1.M32.G					
																			EMV.24/64.STO.1.M32.BS+STS.1.M32.G					
																			EMV-K.24/64.STS.1.M40.G-WE					
																			EMV-K.24/64.STO.1.M25.G					
																			EMV.24/64.STO.1.M32.G+STS.1.M32.G					
																			EMV-K.24/64.ST					
																			EMV-K.24/64.STO.1.M32.G					
																			EMV-K.24/64.STS.1.M40.G-Netural					
																			EMV.24/64.STO.1.M32.G+STS.1.M32.G					
																			EMV-K.24/64.STO.1.M32.G+STS.1.M32.G					

THIS DRAWING IS A CONTROLLED DOCUMENT.

DIMENSIONS: mm

TOLERANCES UNLESS OTHERWISE SPECIFIED: FOR INFO ONLY
0 PLC ±-
1 PLC ±-
2 PLC ±-
3 PLC ±-
4 PLC ±-
ANGLES ±1°
FINISH -

MATERIAL -

DWN Schneider 01.08.2000
CHK Cehweiger 01.08.2000
APVD -

PRODUCT SPEC -
APPLICATION SPEC -
WEIGHT 540 g

TE Connectivity

NAME HOOD
EMV.24/64.STO/STS WITH M-THREAD

SIZE A0 | CAGE CODE 00779 | DRAWING NO C-1106461 | RESTRICTED TO -

CUSTOMER DRAWING | SCALE 5:1 | SHEET 1 OF 1 | REV A19