LOC	DIST
GW	–

REVISIONS

P	LTR	DESCRIPTION	DATE	DWN	APVD
	A1	REVISED PER ECO-11-005294	06APR11	RK	HMR

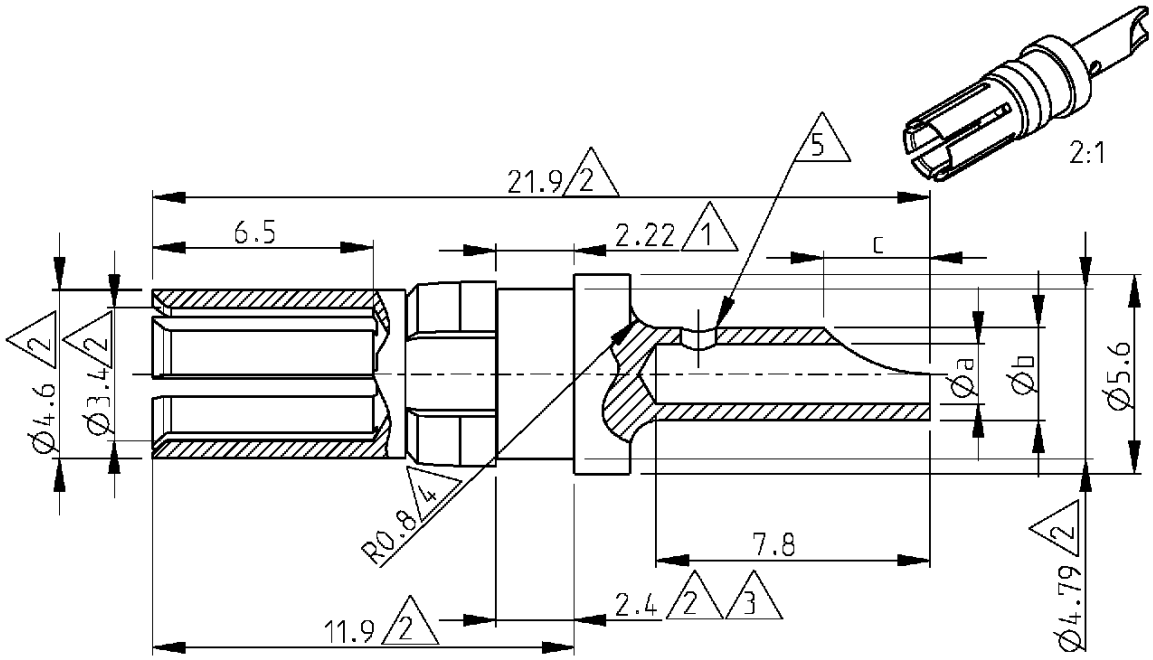

6) Application : DIN 41612 type M.

5 Only on 1-1393589-1

4 Not applicable on 1393589-7

3 Measured with spring moved towards the mating face

2 Max dimension

1 Min dimension

Cross reference table

Old part number	part number	Current	Øa	Øb	dim c	Material	Plating
1-1393589-1	C42334-A347-A96	10 A	1.7	2.6	3	Brass	1 µm Au or Pd in contact area
1393589-9	C42334-A347-A95	20 A	2.8	3.7	4	Brass	1 µm Au or Pd in contact area
1393589-7	C42334-A347-A94	40 A	4.8	5.6	5.2	Brass	1 µm Au or Pd in contact area

RELEASED FOR PUBLICATION

THIS DRAWING IS UNPUBLISHED. © COPYRIGHT ALL RIGHTS RESERVED.

DIMENSIONS: mm

TOLERANCES UNLESS OTHERWISE SPECIFIED:

0 PLC ±
1 PLC ±
2 PLC ±
3 PLC ±
4 PLC ±
ANGLES ±

DWN B. Lenvain 23APR2001
CHK K. Mattheeuws 23APR2001
APVD R. Leeman 23APR2001

PRODUCT SPEC –

APPLICATION SPEC –

WEIGHT –

MATERIAL –

FINISH –

TE Connectivity

NAME High current socket with wire connection

SIZE	CAGE CODE	DRAWING NO	RESTRICTED TO
A4	00779	C-1393589-7	–

CUSTOMER DRAWING

SCALE 5/1 SHEET 1 OF 1 REV A1

Downloaded from Elcodis.com electronic components distributor