PART No. 1487D48SS

for more information visit

www.hammondmfg.com

Data subject to change without notice

Isometric drawing Not to Scale

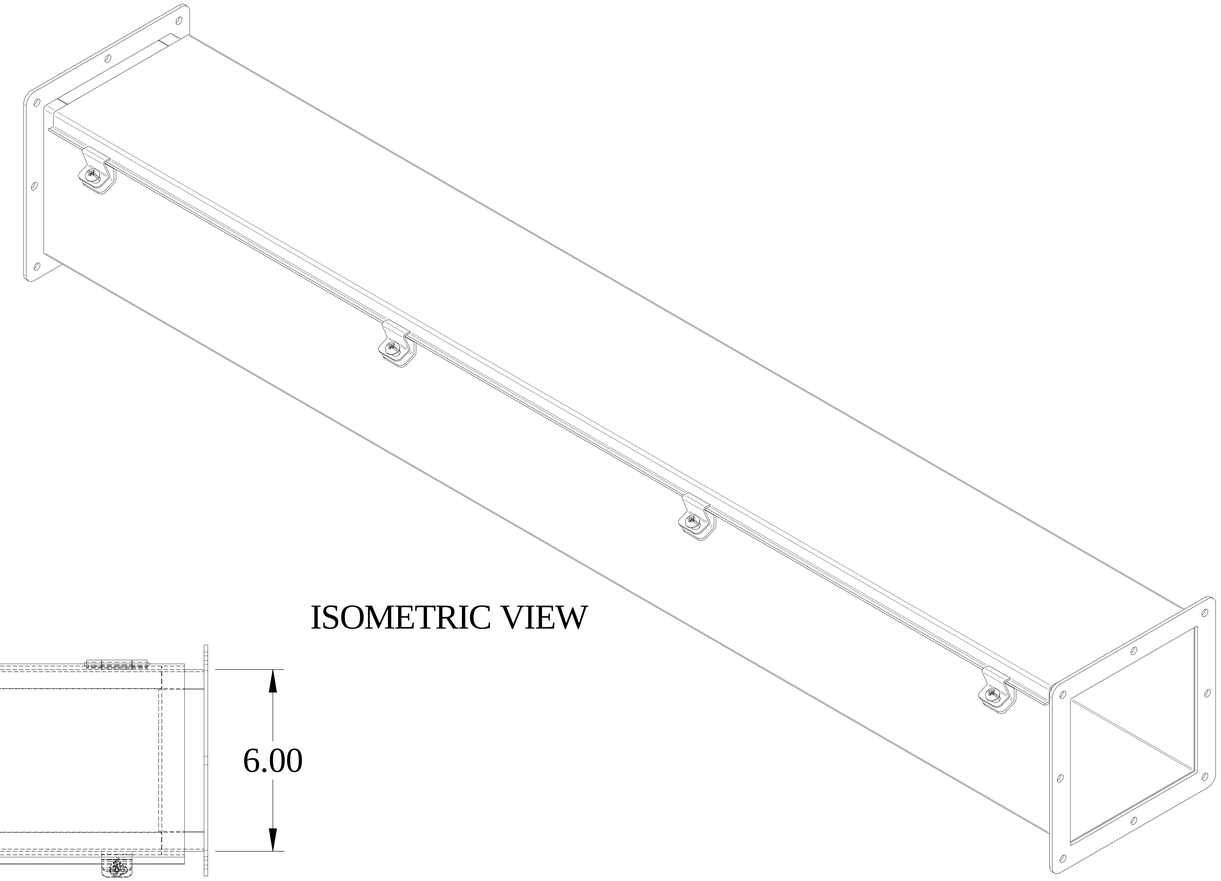

ISOMETRIC VIEW

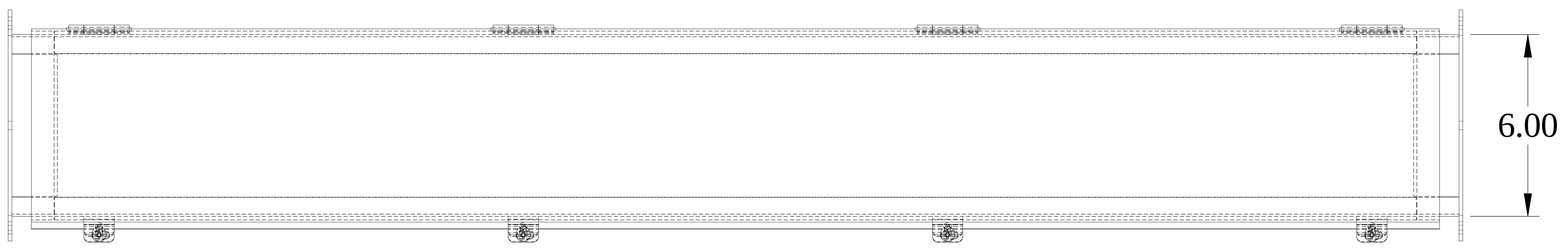

TOP VIEW

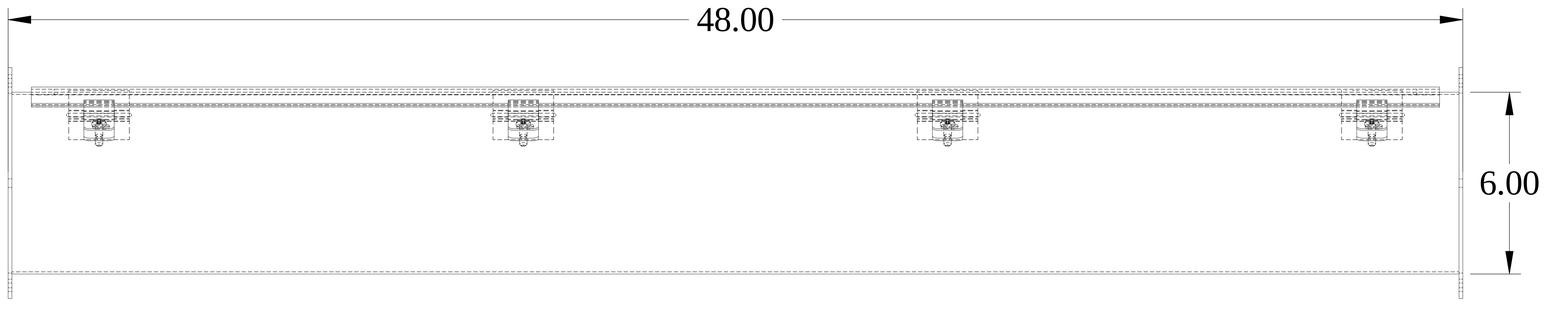

SIDE VIEW

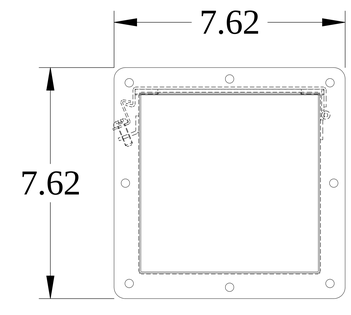

END VIEW