THIS DRAWING IS UNPUBLISHED. RELEASED FOR PUBLICATION 20
© COPYRIGHT 20 BY TYCO ELECTRONICS CORPORATION. ALL RIGHTS RESERVED.

SET UP GAGE 458637-3

LOC	DIST
A	66

REVISIONS

P	LTR	DESCRIPTION	DATE	DWN	APVD
	A	SEE ECO-06-015618	29JUN2006	LJL	MC

PART NUMBER	REV	TERMINATOR	FEED TYPE	DESCRIPTION
1528663-1	A	LEADMAKER	MECH POST FEED	CUTS CARRIER
1528663-2	A	BENCH	MECH PRE FEED	CUTS CARRIER
1528663-6	A	LEADMAKER	MECH POST FEED	CONTINUOUS CARRIER
7-1528663-1	A	LEADMAKER	MECH POST FEED	-1 AND SPARE PARTS
7-1528663-2	A	BENCH	MECH PRE FEED	-2 AND SPARE PARTS
7-1528663-6	A	LEADMAKER	MECH POST FEED	-6 AND SPARE PARTS
7-1528663-7	A	-	-	SPARE PARTS KIT

CRIMP DATA	TYCO TERMINAL		TYCO CRIMP SPEC
TERMINAL NAME: STRIP FORM BUTT SPLICE			
CRIMP	SIZE	TYPE	RANGE
WIRE	1.57 [.062 IN]	F	0.20mm²-0.50mm²
INSUL	2.29 [.090 IN]	O	1.15-1.60 [.045-.063 IN]
WIRE STRIP LENGTH 4.00 [.157 IN]			APPL INSTRUCTIONS 408-8322 & 408-8490
TERMINAL 114-18022 - APPL SPEC - -			FEED 7.50 [.295 IN]

TERMINALS APPLIED

968040 △6	-	-	-
-	-	-	-
-	-	-	-
-	-	-	-
-	-	-	-

WIRE SIZE	CRIMP HEIGHT *	REF SETTING *
0.50mm²	1.12 ±0.03 [.044 ±.001 IN]	B 1
0.35mm²	1.05 ±0.03 [.041 ±.001 IN]	B 6
0.25mm²	1.00 ±0.03 [.039 ±.001 IN]	C 2
0.20mm²	0.98 ±0.03 [.039 ±.001 IN]	C 2
-	-	-
-	-	-
-	-	-
-	-	-
-	-	-
-	-	-
-	-	-
-	-	-

△1 RECOMMENDED SPARE PARTS.
2. GREASE RAM, CAM, CAM FOLLOWER AND FEED ROD LIGHTLY.

△3 CERTAIN TERMINALS REQUIRE LUBRICATION. REFER TO THE APPLICATOR INSTRUCTION SHEET FOR MORE INFORMATION.
4. LUBRICATE DAILY PER THE APPLICATOR INSTRUCTION SHEET SUPPLIED WITH THE APPLICATOR.

△5 ITEM 53, CUT TO LENGTH AT ASSEMBLY.

△6 WIRE APPLIED TO FRONT TERMINAL ONLY, [FEED CARRIER STRIP SIDE]

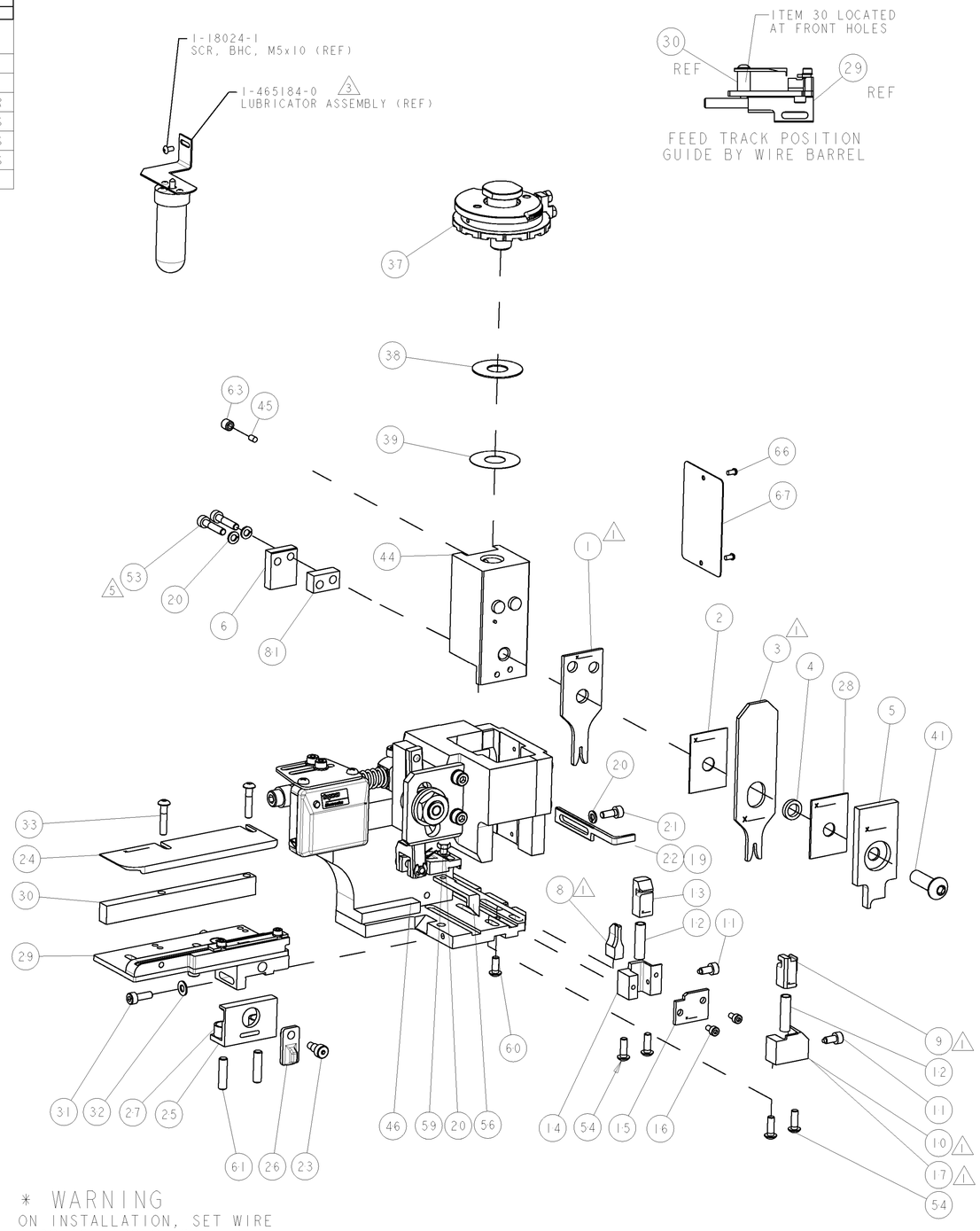

* WARNING
ON INSTALLATION, SET WIRE DISC TO LARGEST WIRE SIZE SETTING. USE OF SETTINGS BELOW MIN. REQUIRED CRIMP HEIGHT SETTING WILL CAUSE DAMAGE TO CRIMP TOOLING.

VIEW B ROTATED 180°

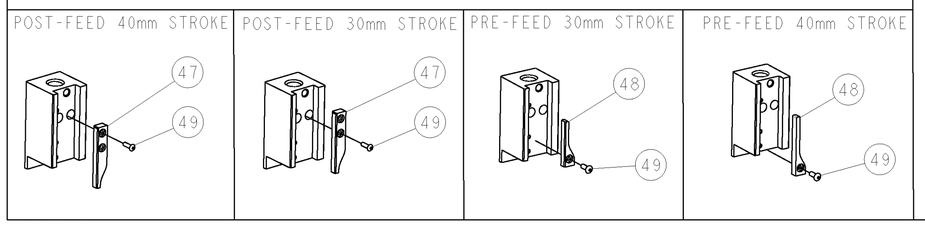

-77	-76	-72	-71	-6	-2	-1	PART NO	DESCRIPTION	ITEM NO
-	-	-	-	-	-	-	-	-	84
-	-	-	-	-	-	-	-	-	83
-	-	-	-	-	-	-	-	-	82
-	1	1	1	1	1	1	6-240641-8	SPACER	81
-	-	-	-	-	-	-	-	-	80
-	-	-	-	-	-	-	-	-	79
-	-	-	-	-	-	-	-	-	78
-	-	-	-	-	-	-	-	-	77
-	-	-	-	-	-	-	-	-	76
-	-	-	-	-	-	-	-	-	75
-	-	-	-	-	-	-	-	-	74
-77	-76	-72	-71	-6	-2	-1	PART NO	DESCRIPTION	ITEM NO

-	-	-	-	-	-	-	-	-	73
-	-	-	-	-	-	-	-	-	72
-	1	1	1	1	1	1	1338705-3	DOCUMENTATION PACKAGE	71
-	-	-	-	-	-	-	-	-	70
-	-	-	-	-	-	-	-	-	69
-	-	-	-	-	-	-	-	-	68
-	1	1	1	1	1	1	461264-5	PLATE, IDENTIFICATION	67
-	2	2	2	2	2	2	21017-2	SCREW, DRIVE	66
-	-	-	-	-	-	-	-	-	65
-	-	-	-	-	-	-	-	-	64
-	1	1	1	1	1	1	3-18031-0	SCR, SET, CUP POINT M6 X 6.0	63
-	-	-	-	-	-	-	-	-	62
-	2	2	2	2	2	2	2-18032-5	SCR, SET, FLT POINT M5 X 20.0	61
-	1	1	1	1	1	1	18024-7	SCR, BTN SKT HD CAP (M4 X 10.0)	60
-	1	1	1	1	1	1	5-18022-2	SCR, HEX HD CAP M4 X 8.0	59
-	-	-	-	-	-	-	-	-	58
-	-	-	-	-	-	-	-	-	57
-	1	1	1	1	1	1	1338685-1	PAWL, FEED	56
-	-	-	-	-	-	-	1338723-1	HOLDER, SHEAR, REAR [NO CUT]	55
-	4	4	4	4	4	4	18024-8	SCR, BTN SKT HD CAP (M4 X 12.0)	54
△5 -	2	2	2	2	2	2	1-18023-4	SCR, SKT HD CAP M4 X 20.0	53
-	-	-	-	-	-	-	-	-	52
-	-	-	-	-	-	-	-	-	51
-	-	-	-	-	-	-	-	-	50
-	1	1	1	1	1	1	18024-3	SCR, BTN SKT HD CAP (M3 X 10.0)	49
-	-	1	-	-	1	-	1338675-1	CAM, UNIVERSAL PRE FEED	48
-	1	-	1	1	-	1	1338676-1	CAM, UNIVERSAL POST-FEED	47
-	1	1	1	1	1	1	1320999-3	APPLICATOR SUBASSEMBLY, HDI	46
-	1	1	1	1	1	1	690191-1	PLUG,NYLON	45
-	1	1	1	1	1	1	1338660-1	RAM	44
-	-	-	-	-	-	-	-	-	43
-	-	-	-	-	-	-	-	-	42
-	1	1	1	1	1	1	2-18024-6	SCR, BTN SKT HD CAP (M8 X 25.0)	41
-	-	-	-	-	-	-	-	-	40
-	1	1	1	1	1	1	690125-1	SHIM SUB-ASSY	39
-	1	1	1	1	1	1	469367-8	SHIM	38
-	1	1	1	1	1	1	879103-3	FINE ADJUST HEAD SUBASSY	37
-	-	-	-	-	-	-	-	-	36
-	-	-	-	-	-	-	-	-	35
-	-	-	-	-	-	-	-	-	34
-	2	2	2	2	2	2	1-18024-0	SCR, BTN SKT HD CAP (M4 X 20.0)	33
-	1	1	1	1	1	1	18027-2	WASHER, FLAT, REG M4	32
-	1	1	1	1	1	1	1-18023-2	SCR, SKT HD CAP M4 X 12.0	31
-	1	1	1	1	1	1	1320908-4	SPACER, STRIP GUIDE	30
-	1	1	1	1	1	1	1633073-2	STRIP GUIDE ASSEMBLY	29
-	1	1	1	1	1	1	1-455888-0	SPACER, CRIMPER	28
-	2	2	2	2	2	2	1-22284-0	SPRING, COMPRESSION	27
-	1	1	1	1	1	1	356835-1	LEVER, DRAG RELEASE	26
-	1	1	1	1	1	1	240792-1	DRAG, TERMINAL	25
-	1	1	1	1	1	1	1320928-1	PLATE, STRIP GUIDE	24
-	1	1	1	1	1	1	980371-4	SCR, SKT HD SHLDR 5.0 DIA X 6.0	23
-	1	-	1	1	-	1	690472-2	STRIPPER	22
-	1	1	1	1	1	1	1-18023-1	SCR, SKT HD CAP M4 X 10.0	21
-	4	4	4	4	4	4	18025-2	WASHER, SPRG LOCK, REG M4	20
-	-	1	-	-	1	-	690472-1	STRIPPER	19
-	-	-	-	-	-	-	-	-	18
△1 -	1	-	-	1	-	-	1338684-1	HOLDER, SHEAR, NO-CUT	17
-	2	2	2	2	2	2	18023-2	SCR, SKT HD CAP M3 X 6.0	16
-	1	1	1	1	1	1	690464-1	SHEAR PLATE, REAR	15
-	1	1	1	1	1	1	1320920-1	SHEAR HOLDER, REAR [CUTTING]	14
-	1	1	1	1	1	1	690463-1	FLOATING SHEAR, REAR	13
-	2	2	2	2	2	2	3-22280-3	SPRING, COMPRESSION	12
-	2	2	2	2	2	2	356885-4	STOP, SHEAR	11
△1 -	-	1	1	-	1	1	1320921-1	SHEAR HOLDER, FRONT, CUT	10
△1 -	1	1	1	1	1	1	454276-1	FLOATING SHEAR, FRONT	9
△1 1	2	2	2	1	1	1	5-1333202-7	ANVIL, COMBINATION	8
-	-	-	-	-	-	-	-	-	7
-	1	1	1	1	1	1	690468-1	DEPRESSOR SHEAR, REAR	6
-	1	1	1	1	1	1	1-455889-4	DEPRESSOR, SHEAR	5
-	1	1	1	1	1	1	238011-4	BLOCK, CRIMPER SPACER	4
△1 1	2	2	2	1	1	1	1-683454-4	CRIMPER, INSULATION O	3
-	1	1	1	1	1	1	455888-6	SPACER, CRIMPER	2
△1 1	2	2	2	1	1	1	1-456403-3	CRIMPER, WIRE PREMIUM	1
-77	-76	-72	-71	-6	-2	-1	PART NO	DESCRIPTION	ITEM NO

THIS DRAWING IS A CONTROLLED DOCUMENT FOR TYCO ELECTRONICS CORPORATION. IT IS SUBJECT TO CHANGE AND THE CONTROLLING ENGINEERING ORGANIZATION SHOULD BE CONTACTED FOR THE LATEST REVISION.

DIMENSIONS: mm [IN]
TOLERANCES UNLESS OTHERWISE SPECIFIED: 0 PLC ±- ; 1 PLC ±- ; 2 PLC ±- ; 3 PLC ±- ; 4 PLC ±- ; ANGLES ±-
MATERIAL - -
FINISH - -

DWN 23MAY2006 D PROUSE
CHK -
APVD 23MAY2006 M.CLIFFORD
PRODUCT SPEC -
APPLICATION SPEC See Table
WEIGHT -

tyco Electronics — Tyco Electronics, Harrisburg, PA 17105-3608

NAME FINE ADJUST SIDE FEED HDI APPLICATOR

SIZE	CAGE CODE	DRAWING NO	RESTRICTED TO
A1	00779	C-1528663	-

CUSTOMER DRAWING — SCALE 3:5 — SHEET 1 OF 1 — REV A