THIS DRAWING IS UNPUBLISHED. RELEASED FOR PUBLICATION 20
DIFFUSION RESTREINTE. LIBRE A LA DIFFUSION
© COPYRIGHT 20 BY TYCO ELECTRONICS CORPORATION. ALL RIGHTS RESERVED. TOUS DROITS RESERVES

LOC	DIST
F	00

REVISIONS

P	LTR	DESCRIPTION MODIFICATIONS	DATE	DWN DESS.	APVD APP.
	A	First issue	16 Mars 04	PFs	JDr
	B	Changing of colour seal, grey become green	17 dec 2004	PFs	JDr

(A) PIN HOUSING

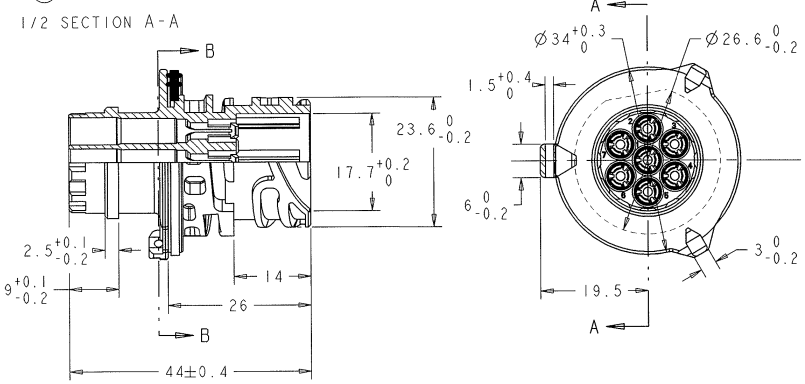

CUSTOMER PN					
TYCO PN	1703013-1	1703014-1	828904-1	828905-1	828922-1
COLOUR / DESCRIPTION	wire 0.5 to 1mm²	wire 1.1 to 2.5mm²	Blue for PIN 1703013-1	White for PIN 1703014-1	Natural
COMPONENTS ASSOCIATED	PIN		WIRE SEAL		CAVITY PLUG

PACKAGE DELIVERY UNASSEMBLED

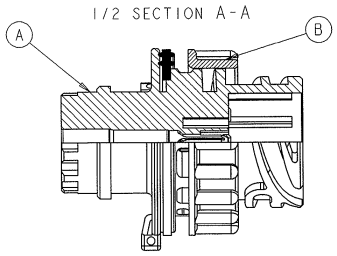

REP	Qty.	DESCRIPTION	MATERIAL	COLOUR	TYCO PN	CUSTOMER PN
(B)	1	FIXING RING	PBT GF20	Black	1544676-1	
(A)	1	PIN HOUSING AND SEAL ASSEMBLY	PBT GF20 (housing) SILICONE (seal)	Black (housing) Green (seal)		

(B) FIXING RING

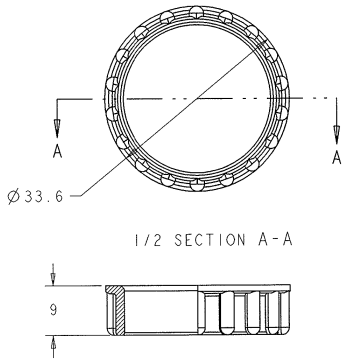

CUT OF THE FLAT SUPPORT

Thickness = $2.5^{+0.1}_{0}$

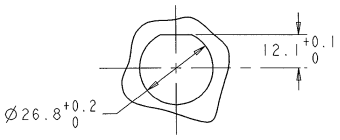

SCALE 1:1

In accordance with Standard FMVSS302

THIS DRAWING IS A CONFIDENTIAL DOCUMENT OF TYCO ELECTRONICS CORPORATION. IT IS SUBMITTED FOR THE INFORMATION OF THE RECEIVING ORGANIZATION ONLY AND CANNOT BE COPIED FOR THIRD PARTIES USE.
CE PLAN EST UN DOCUMENT CONFIDENTIEL PAR AMP INCORPORATED. IL EST SOUMIS POUR INFORMATIONS AUX ORGANISMES DE RECEPTION. IL NE PEUT ETRE COPIE POUR DES TIERS.
TYCO ELECTRONICS DE FRANCE POUR OBTENIR LA DOCUMENTATION

DIMENSIONS: mm

TOLERANCES UNLESS OTHERWISE SPECIFIED: TOLERANCES NON SPECIFIEES (SUIVANT NB DE DECIMALES)
1 PLC/DEC: ±-
2 PLC/DEC: ±-
3 PLC/DEC: ±0.3
4 PLC/DEC: ±-
5 PLC/DEC: ±-
ANGLES ±5°
FINISH FINITION -

MATERIAL MATIERE SEE TABLE

DWN/DESSINE P. FLORES 11dec04
CHK/VERIFIE J. CORONA 11dec04
APVD/APPROUVE J. DAHER 11dec04
PRODUCT SPEC. SPEC. PRODUIT 108-18622-0
APPLICATION SPEC. SPEC. APPLICATION 114-18255-0
WEIGHT MASSE APPROX. -

Tyco Electronics France SAS
RN 90, 38530 Chapareillan

NAME TITRE PORTE-BROCHES DIA 1.5mm 7 VOIES 1.5mm PIN HOUSING 7 POSI. SEALED

SIZE FORMAT A2 | CAGE CODE 00779 | DRAWING NO No PLAN C-1544676 | RESTRICTED TO RESERVE A -

CUSTOMER DRAWING /PLAN CLIENT | INDIQUEMENT POUR REFERENCE | SCALE ECHELLE 2:1 | SHEET FEUILLE 1 OF DE 1 | REV B

AMP 1471-9 REV 31MAR2000

Downloaded from Elcodis.com electronic components distributor