THIS DRAWING IS UNPUBLISHED. RELEASED FOR PUBLICATION - ,- .
© COPYRIGHT - BY TYCO ELECTRONICS CORPORATION. ALL INTERNATIONAL RIGHTS RESERVED.

LOC	DIST
—	—

REVISIONS

P	LTR	DESCRIPTION	DATE	DWN	APVD
	A	–	5/13/09	SS	MM
	A1	REVISED PER ECO-10-000444	20JAN10	KK	HMR

PHYSICAL PROPERTIES	
INSULATION MATERIAL	GLASS FILLED THERMOPLASTIC RATED 94V-0
COLOR	BLACK
CONTACT MATERIAL	HIGH STRENGTH COPPER ALLOY
CONTACT PLATING	MATING AREA – GOLD OVER NICKEL
	TAIL AREA –TIN/LEAD
ELECTRICAL PROPERTIES	
CURRENT RATING	3 AMPERES
INSULATION RESISTANCE	5000 MEGOHMS MINIMUM
DIELECTRIC STRENGTH	600 VDC AT SEA LEVEL
ENVIRONMENTAL PROPERTIES	
TEMPERATURE RATING	-40°C TO +100°C
MECHANICAL PROPERTIES	
MATING FORCES	8 OZ/PAIR MAX.
UNMATING FORCES	2 OZ/PAIR MAX.

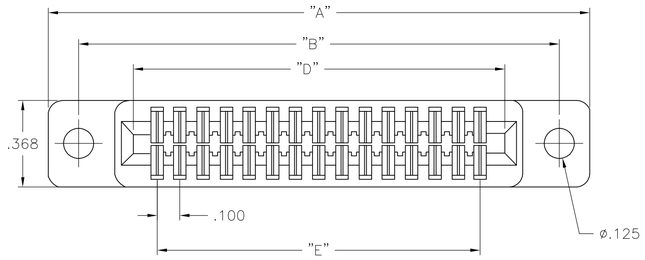

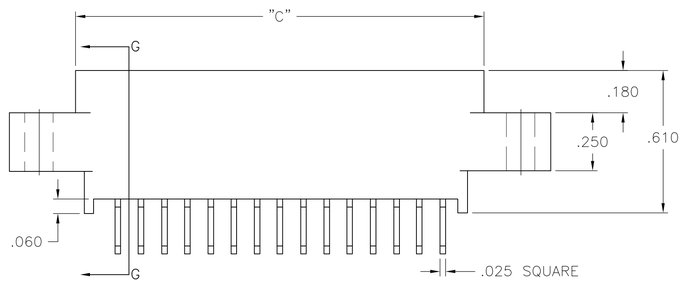

MOUNTING STYLE "A" 15 POSITION ILLUSTRATED
(ADDITIONAL MOUNTING STYLES ARE SHOWN)

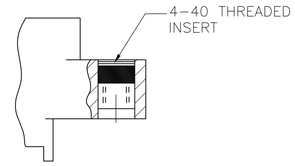

MOUNTING STYLE "B"

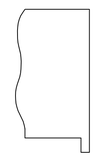

MOUNTING STYLE "C"

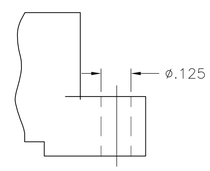

MOUNTING STYLE "D"

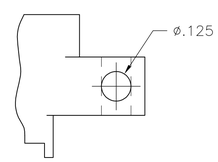

MOUNTING STYLE "E"

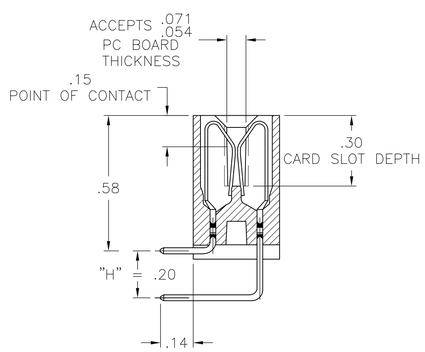

SECTION G–G

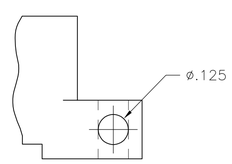

MOUNTING STYLE "F"

CATALOG NUMBER CODE DESCRIPTION

AB D ** RA 29 * M***

- AB — SERIES DESIGNATOR (.100 x .200)
- D — DOUBLE READOUT
- ** — NUMBER OF CONTACT ROWS 10,12,15,18,20,22,25,28,30, 31,35,36,40,43,44,50,60,65
- RA — TERMINATION STYLE (RIGHT ANGLE DIP SOLDER)
- 29 — CONTACT PLATING (GOLD/TIN PLATE)
- * — MOUNTING STYLE
  - A= .125 DIA MOUNTING HOLES
  - B= 4-40 THREADED INSERTS
  - C= WITHOUT MOUNTING EARS
  - D= FLUSH MOUNT/.125 DIA MOUNTING HOLES
  - E= CROSS-DRILLED STANDARD EAR
  - F= CROSS-DRILLED FLUSH MOUNT EAR
- M*** — SPECIAL OR CUSTOMER MODIFICATION "M" FOLLOWED BY NTHREE DIGIT FACTORY ASSIGNED NUMBER

POLARIZING KEY AVAILABLE: CAT. NO. "96014-01"

NO. OF CONTACT ROWS	NO. OF CONTACTS	DIM "A"	DIM "B"	DIM "C"	DIM "D"	DIM "E"
55	130	7.335	7.075	6.760	6.604	6.400
60	120	6.835	6.575	6.260	6.104	5.900
50	100	5.835	5.575	5.260	5.104	4.900
44	88	5.235	4.975	4.660	4.504	4.300
43	86	5.135	4.875	4.560	4.404	4.200
40	80	4.835	4.575	4.260	4.104	3.900
36	72	4.435	4.175	3.860	3.704	3.500
35	70	4.335	4.075	3.760	3.604	3.400
31	62	3.935	3.675	3.360	3.204	3.000
30	60	3.835	3.575	3.260	3.104	2.900
28	56	3.635	3.375	3.060	2.904	2.700
25	50	3.335	3.075	2.760	2.604	2.400
22	44	3.035	2.775	2.460	2.304	2.100
20	40	2.835	2.575	2.260	2.104	1.900
18	36	2.635	2.375	2.060	1.904	1.700
15	30	2.335	2.075	1.760	1.604	1.400
12	24	2.035	1.775	1.460	1.304	1.100
10	20	1.835	1.575	1.260	1.104	.900

THIS DRAWING IS A CONTROLLED DOCUMENT.

DIMENSIONS: INCHES

TOLERANCES UNLESS OTHERWISE SPECIFIED:
0 PLC ± –
1 PLC ± –
2 PLC ± .10
3 PLC ± –
4 PLC ± –
ANGLES ± –

MATERIAL –
FINISH –

DWN S SCHLEGEL 5/13/09
CHK M MILLER 5/13/09
APVD M MILLER 5/13/09
PRODUCT SPEC —
APPLICATION SPEC —
WEIGHT —

Tyco Electronics
Tyco Electronics Corporation
Harrisburg, Pa 17105-3608

NAME
A8 CARD EDGE CONNECTOR
(.100 x .200 CENTERS) RIGHT ANGLE DIP
SOLDER TAILS

SIZE	CAGE CODE	DRAWING NO	RESTRICTED TO
A1	00779	C-1437270-5	—

CUSTOMER DRAWING | SCALE 3:1 | SHEET 1 OF 2 | REV A1

4805 (1/08)

THIS DRAWING IS UNPUBLISHED. RELEASED FOR PUBLICATION – ,– .
© COPYRIGHT – BY TYCO ELECTRONICS CORPORATION. ALL INTERNATIONAL RIGHTS RESERVED.

LOC	DIST
—	—

REVISIONS

P	LTR	DESCRIPTION	DATE	DWN	APVD
	–	SEE SHEET 1	–	—	—

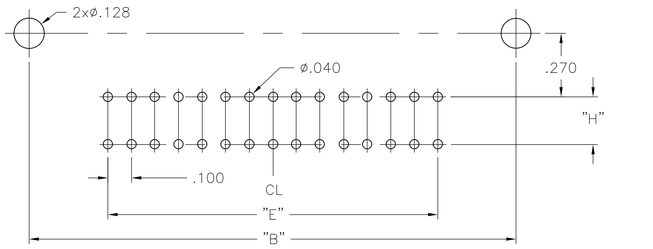

RECOMMENDED PC HOLE PATTERN
FOR MOUNTING STYLE "E"

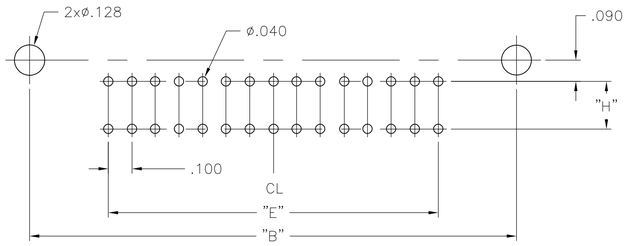

RECOMMENDED PC HOLE PATTERN
FOR MOUNTING STYLE "F"

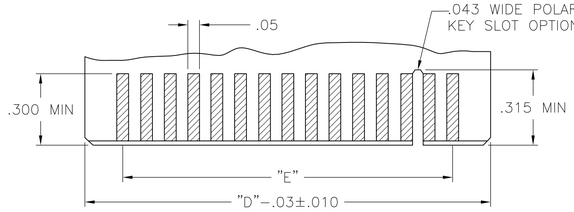

RECOMMENDED PC BOARD

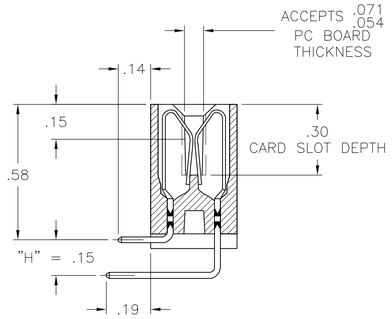

OPTION "M233"

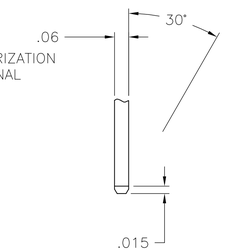

1 OBSOLETE PARTS: OBSOLETE CIS STREAMLINING
PER D.RENAUD/D.SINISI

	QTY	HOUSING	QTY	CONTACT	QTY	CONTACT	DESCRIPTION	PART NUMBER
OBSOLETE 1	1	2–1454268–2	23	1454264–3	23	1454264–1	A8D22RA29EM233	~~6–1437269–7~~
	1	2–1454268–2	23	5–1454264–3	23	5–1454264–1	A8D22RA29EM233LF	~~6–6437269–7~~
	1	5–1454268–2	51	1454264–3	51	1454264–1	A8D50RA29BM233	~~4–1437270–3~~
	1	5–1454268–2	51	5–1454264–3	51	5–1454264–1	A8D50RA29BM233LF	~~4–6437270–3~~
	1	5–1454268–0	45	1454264–3	45	1454264–1	A8D44RA29CM233	~~3–1437270–8~~
	1	5–1454268–0	45	5–1454264–3	45	5–1454264–1	A8D44RA29CM233LF	~~3–6437270–8~~
	1	4–1454268–3	37	1454264–3	37	1454264–1	A8D36RA29EM233	~~2–1437270–3~~
	1	4–1454268–3	37	5–1454264–3	37	5–1454264–1	A8D36RA29EM233LF	~~2–6437270–3~~
	1	3–1454268–8	32	1454264–3	32	1454264–1	A8D31RA29CM233	~~–1437270–7~~
	1	3–1454268–8	32	5–1454264–3	32	5–1454264–1	A8D31RA29CM233LF	~~–6437270–7~~
	1	3–1454268–6	32	1454264–3	32	1454264–1	A8D31RA29BM233	~~–1437270–5~~
	1	3–1454268–6	32	5–1454264–3	32	5–1454264–1	A8D31RA29BM233LF	~~–6437270–5~~
	1	2–1454268–7	26	1454264–3	26	1454264–1	A8D25RA29FM233	~~7–1437269–8~~
	1	2–1454268–7	26	5–1454264–3	26	5–1454264–1	A8D25RA29FM233LF	~~7–6437269–8~~
	1	2–1454268–8	26	1454264–3	26	1454264–1	A8D25RA29CM233	~~7–1437269–6~~
	1	2–1454268–8	26	5–1454264–3	26	5–1454264–1	A8D25RA29CM233LF	~~7–6437269–6~~
	1	2–1454268–5	26	1454264–3	26	1454264–1	A8D25RA29AM233	~~7–1437269–4~~
	1	2–1454268–5	26	5–1454264–3	26	5–1454264–1	A8D25RA29AM233LF	~~7–6437269–4~~
	1	1–1454268–5	19	1454264–3	19	1454264–1	A8D18RA29FM233	~~5–1437269–3~~
	1	1–1454268–5	19	5–1454264–3	19	5–1454264–1	A8D18RA29FM233LF	~~5–6437269–3~~
	1	1–1454268–6	19	1454264–3	19	1454264–1	A8D18RA29CM233	5–1437269–2
	1	1–1454268–6	19	5–1454264–3	19	5–1454264–1	A8D18RA29CM233LF	5–6437269–2
OBSOLETE 1	1	1–1454268–2	16	1454264–3	16	1454264–1	A8D15RA29FM233	~~4–1437269–5~~
	1	1–1454268–2	16	5–1454264–3	16	5–1454264–1	A8D15RA29FM233LF	~~4–6437269–5~~
	1	1–1454268–1	16	1454264–3	16	1454264–1	A8D15RA29EM233	~~4–1437269–4~~
	1	1–1454268–1	16	5–1454264–3	16	5–1454264–1	A8D15RA29EM233LF	~~4–6437269–4~~
	1	1–1454268–3	16	1454264–3	16	1454264–1	A8D15RA29CM233	~~4–1437269–2~~
	1	1–1454268–3	16	5–1454264–3	16	5–1454264–1	A8D15RA29CM233LF	~~4–6437269–2~~
	1	1454268–9	14	1454264–3	14	1454264–1	A8D13RA29CM233	~~3–1437269–6~~
	1	1454268–9	14	5–1454264–3	14	5–1454264–1	A8D13RA29CM233LF	~~3–6437269–6~~
	1	1454268–6	13	1454264–3	13	1454264–1	A8D12RA29EM233	~~3–1437269–1~~
	1	1454268–6	13	5–1454264–3	13	5–1454264–1	A8D12RA29EM233LF	~~3–6437269–1~~
	1	1454268–3	11	1454264–3	11	1454264–1	A8D10RA29CM233	2–1437269–3
1 OBSOLETE	1	1454268–3	11	5–1454264–3	11	5–1454264–1	A8D10RA29CM233LF	~~2–6437269–3~~

THIS DRAWING IS A CONTROLLED DOCUMENT.

DIMENSIONS: INCHES

TOLERANCES UNLESS OTHERWISE SPECIFIED:
0 PLC ± –
1 PLC ± –
2 PLC ± .10
3 PLC ± –
4 PLC ± –
ANGLES ± –

MATERIAL –
FINISH –

DWN S SCHLEGEL 5/13/09
CHK M MILLER 5/13/09
APVD M MILLER 5/13/09
PRODUCT SPEC —
APPLICATION SPEC —
WEIGHT —

Tyco Electronics
Tyco Electronics Corporation
Harrisburg, Pa 17105–3608

NAME
A8 CARD EDGE CONNECTOR
(.100 x .200 CENTERS) RIGHT ANGLE DIP
SOLDER TAILS

SIZE	CAGE CODE	DRAWING NO	RESTRICTED TO
A1	00779	C–1437270–5	—

CUSTOMER DRAWING | SCALE 3:1 | SHEET 2 OF 2 | REV A1

4805 (1/08)