SCALA NON IMPEGNATIVA (DO NOT SCALE)
DIMENSIONI IN (DIMENSIONS IN) mm

METRIC

PROIEZIONE EUROPEA (EUROPEAN PROJECTION)

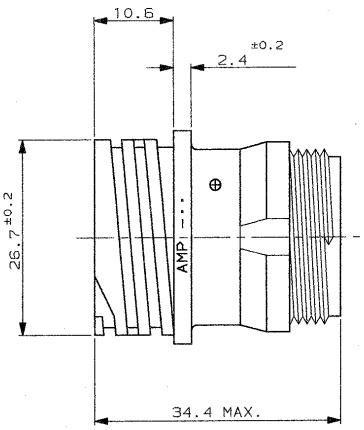


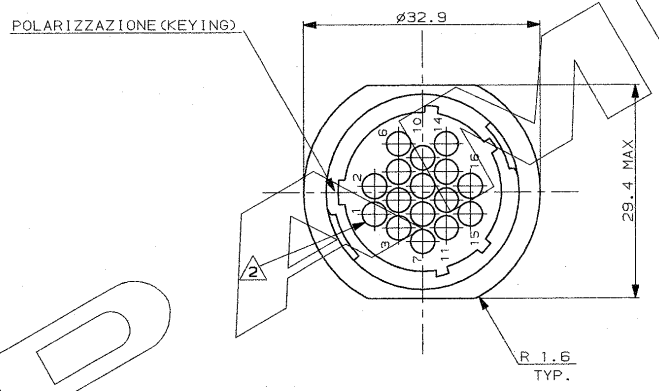


NOTE (NOTES)

1. MATERIALE: PA 6-6 CARICATO VETRO UL RECOGNIZED, COLORE NERO
   (MATERIAL: PA 6-6 G.F. FILLED UL RECOGNIZED, COLOR BLACK)

2. OGNI CAVITA` E` IDENTIFICATA DAL NUMERO POSTO SIA SUL FRONTE CHE SUL RETRO DEL CONNETTORE.
   (CONTACT CAVITIES IDENTIFIED BY CHARACTERS)

3. QUESTO CONNETTORE E' APPROVATO UL CON FILE N.E28476
   E CERTIFICATO CSA CON FILE N.LR7189A-259
   (THIS CONNECTOR IS UL RECOGNIZED BY FILE N.E28476
   AND CSA CERTIFIED BY FILE N.LR7189A-259)

IL DISEGNO INDICA IL P.N. 183077-1
(P.N. 183077-1 AS SHOWN)

| REV. (REVISION) | REVISIONI (REVISION RECORD) | DIS. (DR) | DATA (DATE) |
|---|---|---|---|
| A3 | REVISED ET00-0123-99 | G.S. | 01 July |
| A | RELEASED FOR PROD. ET00-0228-94 | C.P. | 18 MAR. '94 |

CUSTOMER DRAWING FOR REFERENCE ONLY | DISEGNO PER CLIENTE SOLO PER RIFERIMENTO

THIS DRAWING IS UNPUBLISHED | RELEASE FOR PUBLICATION 1991
© COPYRIGHT 19 BY AMP INCORPORATED, HARRISBURG, PA. ALL INTERNATIONAL RIGHT RESERVED. AMP PRODUCTS MAY BE COVERED BY U.S. AND FOREIGN PATENT AND/OR PATENT PENDING

TOLLERANZE: SE NON DIVERSAMENTE SPECIFICATO (TOLERANCES, UNLESS OTHERWISE SPECIFIED) ± 0.3
ANGOLI (ANGLES) ± 2°
DIAM. ISOLANTE (INS. DIA. RANGE) –
RANGO FILO (WIRE RANGE) –
SCALA (SCALE) –

AMP
AMP ITALIA S.p.A.
Corso F.Lli Cervi, 15
COLLEGNO (TORINO)

DIS. (DR.) 18 MAR. '94 C.PIA
CONT. (CHK) 18 MAR. '94 R.CANTORE
APP. (APP.) –
DESCRIZIONE (DESCRIPTION) C.P.C. FREE-HANGING SIZE 17-16 STD SEX SERIES 1

| LOC. | SIZE | NUMERO (DWG NO) | REV. | FOGLIO (SHEET) |
|---|---|---|---|---|
| I | A3 | C – 183077 | A3 | 1 DI (OF) 1 |

DISTRIBUZIONE (DISTRIBUTION)

Downloaded from Elcodis.com electronic components distributor