Distributed by:

JAMECO® ELECTRONICS

www.Jameco.com ✦ 1-800-831-4242

The content and copyrights of the attached material are the property of its owner.

Jameco Part Number 743154

6.71mm (.264") Pitch .093" Pin and Socket Receptacle

3191

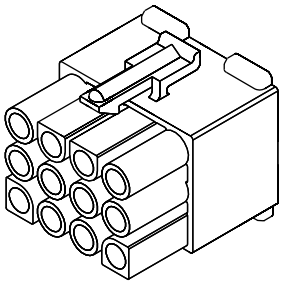

FEATURES AND SPECIFICATIONS

Features and Benefits
- Positive lock
- Fully isolated terminals
- Polarized housing assures proper mating
- Male and female terminals may be used in receptacle housing

Reference Information
Packaging: Bag
UL File No.: E29179
CSA File No.: LR19980
TUV License No.: R75107
Mates With: 5219 header and 3191 plug
Use With: Standard .093" terminal
Designed In: Inches

Electrical
Voltage: 600V
Current: 12.0A max.*
Dielectric Withstanding Voltage: 5000V AC rms

Mechanical
Contact Retention to Housing: 20 lb min.

Physical
Housing: Nylon, UL 94V-0 or 94V-2
Operating Temperature: -40 to +105˚C

* Depending on circuit size and wire gauge; please refer to product specifications

CATALOG DRAWING (FOR REFERENCE ONLY)

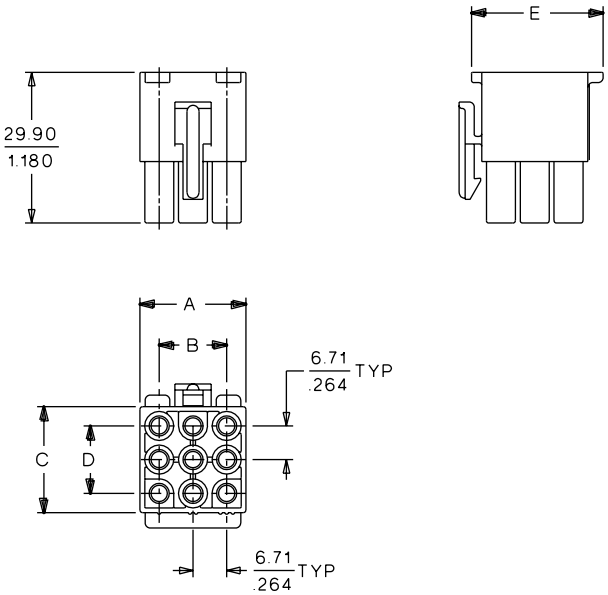

ORDERING INFORMATION AND DIMENSIONS

Circuits	Order No.		Amperes per Circuit	Dimension				
	94V-2	94V-0		A	B	C	D	E
1	• 19-09-1019	• 19-09-1016	12	7.60 (.300)		7.60 (.300)		10.62 (.418)
2	• 19-09-1029	• 19-09-1026	12	14.30 (.560)	6.71 (.264)	7.60 (.300)		12.70 (.500)
3	• 19-09-1039	• 19-09-1036	11	21.00 (.830)	13.42 (.528)	7.60 (.300)		12.70 (.500)
4	• 19-09-1049	• 19-09-1046	9	27.70 (1.090)	20.13 (.792)	7.60 (.300)		12.70 (.500)
6	• 19-09-1069	• 19-09-1066	9	21.00 (.830)	13.42 (.528)	14.30 (.560)	6.71 (.264)	19.38 (.763)
9	• 19-09-1099	• 19-09-1096	9	21.00 (.830)	13.42 (.528)	21.00 (.830)	13.42 (.528)	26.20 (1.030)
12	• 19-09-1129	• 19-09-1126	9	27.70 (1.090)	20.13 (.792)	21.00 (.830)	13.42 (.528)	26.20 (1.030)
15	• 19-09-1159	• 19-09-1156	9	34.40 (1.350)	26.84 (1.056)	21.00 (.830)	13.42 (.528)	26.20 (1.030)

• US Standard Product, available through Molex franchised distributors

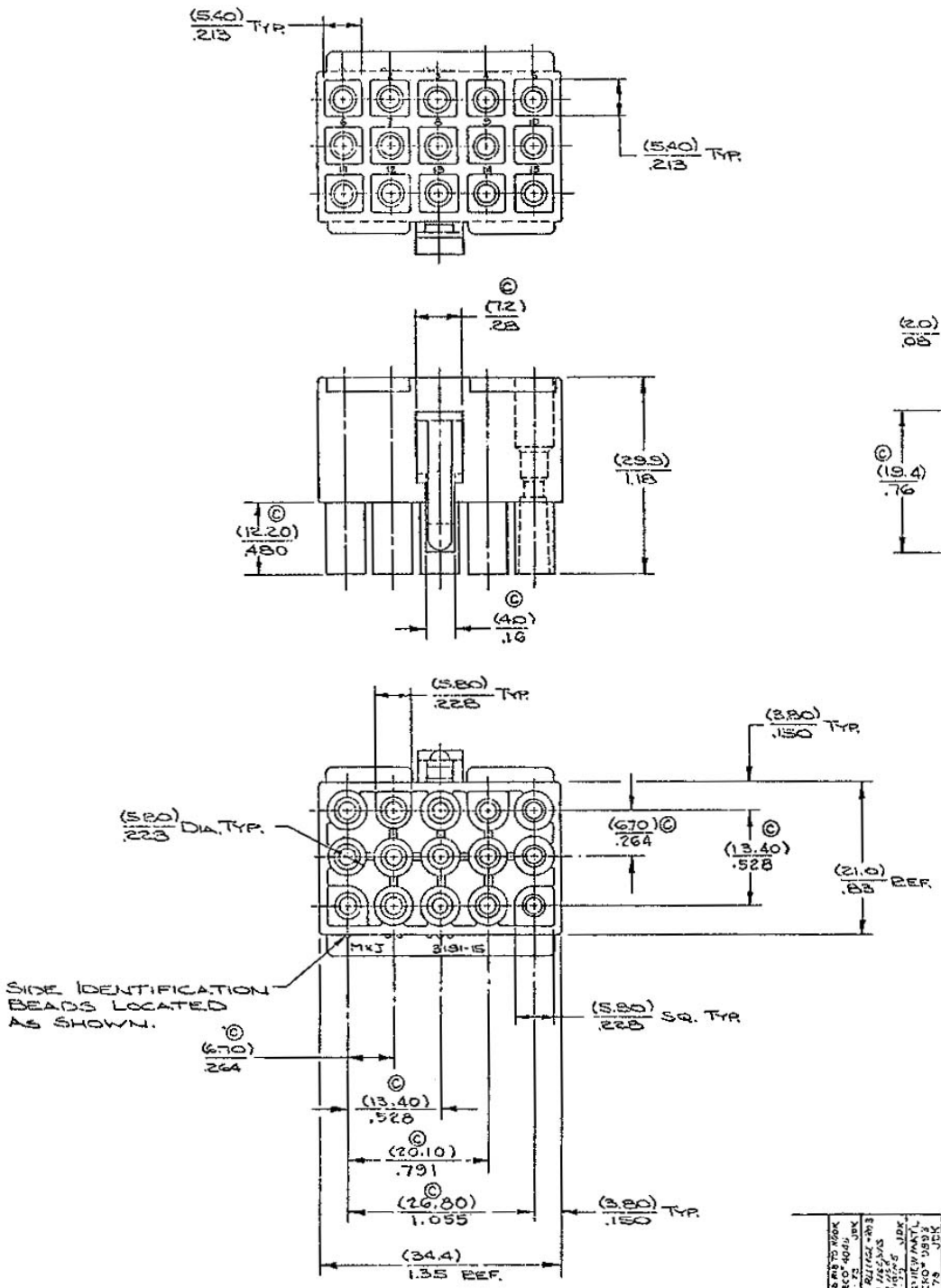

PART NO. 19-**-115*
ENG. NO. SD-3191-15R1-*

PART NO.	ENG. NO.	MATERIAL
19-09-3151	SD-3191-15R1-203	ASAHI LEONA FR-200
NOT TOOLED	SD-3191-15R1-202	MOD. NYLON 6/6 94V-0 DUPONT FE-3016
NOT TOOLED	SD-3191-15R1-200	MOD. NYLON 6/6 94V-0 MONSANTO M340
19-09-1156	SD-3191-15R1-201	MOD. NYLON 6/6 94V-0 WELLAMID FR22-FN
19-09-1159	SD-3191-15R1	NYLON TYPE 6/6 94V-0

REVISIONS

LTR.	REVISIONS
H	ADDED MATL TO BOM PER ECO 4046 JBK
G	FROM RELEASE -203 ADDED MATERIALS ECO 4046 JBK
F	NOTE VIEW MATL PER ECO 4039 JBK
E	ADDED MATL ECO NO. 3360
D	X-RELEASE
C	
B	
A	DWG RELEASED PER ECO 4046 11/21/75

DIMENSIONS SHOWN ARE IN INCH
UNLESS OTHERWISE SPECIFIED TOLERANCE
INCH: 2 PLACE ±.010, 3 PLACE ±.014, ANGULAR ±1°
METRIC: 2 PLACE ±0.25, 3 PLACE ±0.35
WET WHERE APPLICABLE DUST
BURR WITHIN DIMENSIONS
SEE OTHERWISE SPECIFIED
DO NOT SCALE DRAWING

DRWG BY W.E.L. CHK'D BY
APP'D BY SCALE 2X

TITLE: HOUSING - RECEPTACLE, 15 CKT. (UNIVERSAL)

MOLEX INCORPORATED
EMIL ST. LOUIS 60537 U.S.A.

DATE 10/28/75

PART NO. 19-**-115* ENG. NO. SD-3191-15R1-* C

THIS DRAWING CONTAINS INFORMATION THAT IS PROPRIETARY TO MOLEX INC. AND SHOULD NOT BE USED WITHOUT WRITTEN PERMISSION.

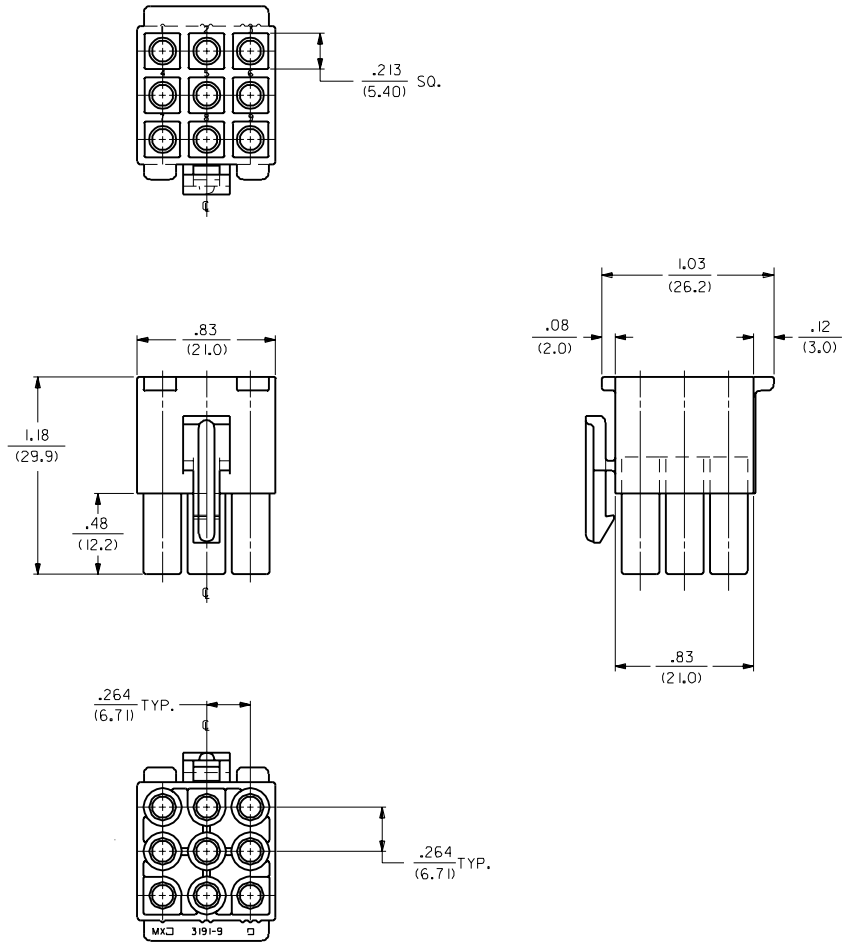

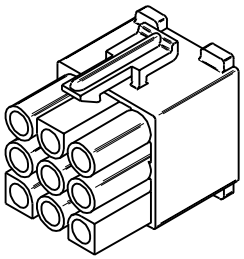

RECEPTACLE

LTR.	REVISIONS	LTR.	REVISIONS
		J	SEE SHT. 1

DIMENSIONS SHOWN (METRIC) INCH

UNLESS OTHERWISE SPECIFIED TOLERANCES: ANGULAR ± 1/2° 10

	INCH	METRIC
3 PLACE	± .010	---
2 PLACE	± .014	± 0.25
1 PLACE	---	± 0.35

DRAFT WHERE APPLICABLE MUST REMAIN WITHIN DIMENSIONS

DRWG. BY GEP | CHK'D. BY RW
APP'D. BY RAS | SCALE 2 : 1

▽ = ▼ = REVISE ONLY ON CAD SYSTEM

TITLE .093/(2.36) HOUSING, PLUG AND RECEPTACLE, 9 CKT., .264/(6.70) CTRS.

MOLEX INCORPORATED LISLE, ILL. 60532 U.S.A.

SHEET NO. 2 | DATE 8/ 2/89

PART NO. SEE CHART | DRWG. NO. SD-3191-9•

FILE NAME S31919X2 DGN

THIS DRAWING CONTAINS INFORMATION THAT IS PROPRIETARY TO MOLEX INC. AND SHOULD NOT BE USED WITHOUT WRITTEN PERMISSION.

DIV. CP | SIZE C

NO P.S.

PLUG	
PART NO.	ENG. NO.
19-09-2098	3191-9P
19-09-2099	3191-9P1
19-09-2097	3191-9P-201
19-09-2096	3191-9P1-201

RECEPTACLE	
PART NO.	ENG. NO.
19-09-1099	3191-9R1
19-09-1096	3191-9R1-201

LEGEND:

3191-9****-*

CIRCUIT SIZE

P = PLUG
R = RECEPTACLE

EARS: BLANK = WITH PREBENT EARS (PLUG ONLY)
1 = WITHOUT EARS

COLOR: BLANK = NATURAL COLOR
AM=AMBER BK=BLACK BU=BLUE
BN=BROWN GY=GRAY GN=GREEN
OR=ORANGE RD=RED YW=YELLOW
COLORS AVAILABLE ONLY IN 94V-2 MATERIAL

MATERIAL: BLANK=NYLON TYPE 6/6, 94V-2
201=NYLON TYPE 6/6, 94V-0

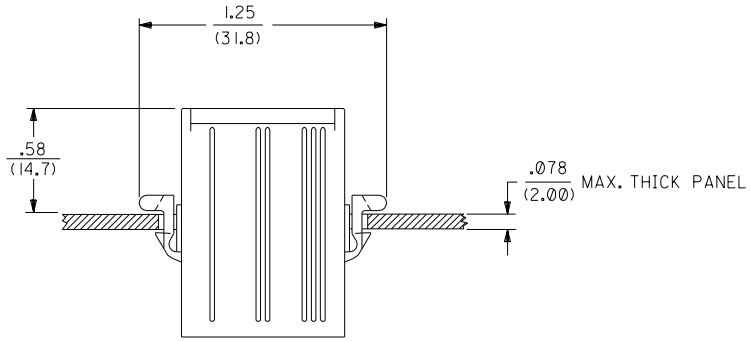

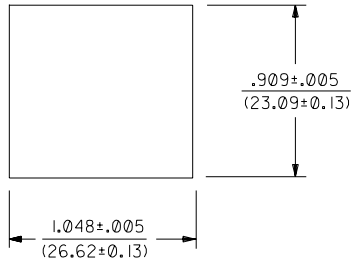

RECOMMENDED HOLE CUTOUT

NOTES:

1. THESE HOUSINGS FOR USE WITH MOLEX .093/(2.36) DIAMETER SERIES TERMINALS.

LTR.	REVISIONS	LTR.	REVISIONS
		J	SEE SHT. 1

DIMENSIONS SHOWN (METRIC) INCH
UNLESS OTHERWISE SPECIFIED TOLERANCES: ANGULAR ± 1/2°

	INCH	METRIC
3 PLACE	± .010	---
2 PLACE	± .014	± 0.25
1 PLACE	---	± 0.35

DRAFT WHERE APPLICABLE MUST REMAIN WITHIN DIMENSIONS

DRWG. BY GEP | CHK'D. BY RW
APP'D. BY RAS | SCALE --:--

▽ = ▼ = REVISE ONLY ON CAD SYSTEM

TITLE .093/(2.36) HOUSINGS PLUG AND RECEPTACLE 9 CKT., .264/(6.70) CTRS.

MOLEX INCORPORATED LISLE, ILL. 60532 U.S.A.

SHEET NO. 3 | DATE 8/ 2/89

PART NO. SEE CHART | DRWG. NO. SD-3191-9*

FILE NAME S31919X3 DGN

THIS DRAWING CONTAINS INFORMATION THAT IS PROPRIETARY TO MOLEX INC. AND SHOULD NOT BE USED WITHOUT WRITTEN PERMISSION.

DIV. CP | SIZE C

NO P.S.

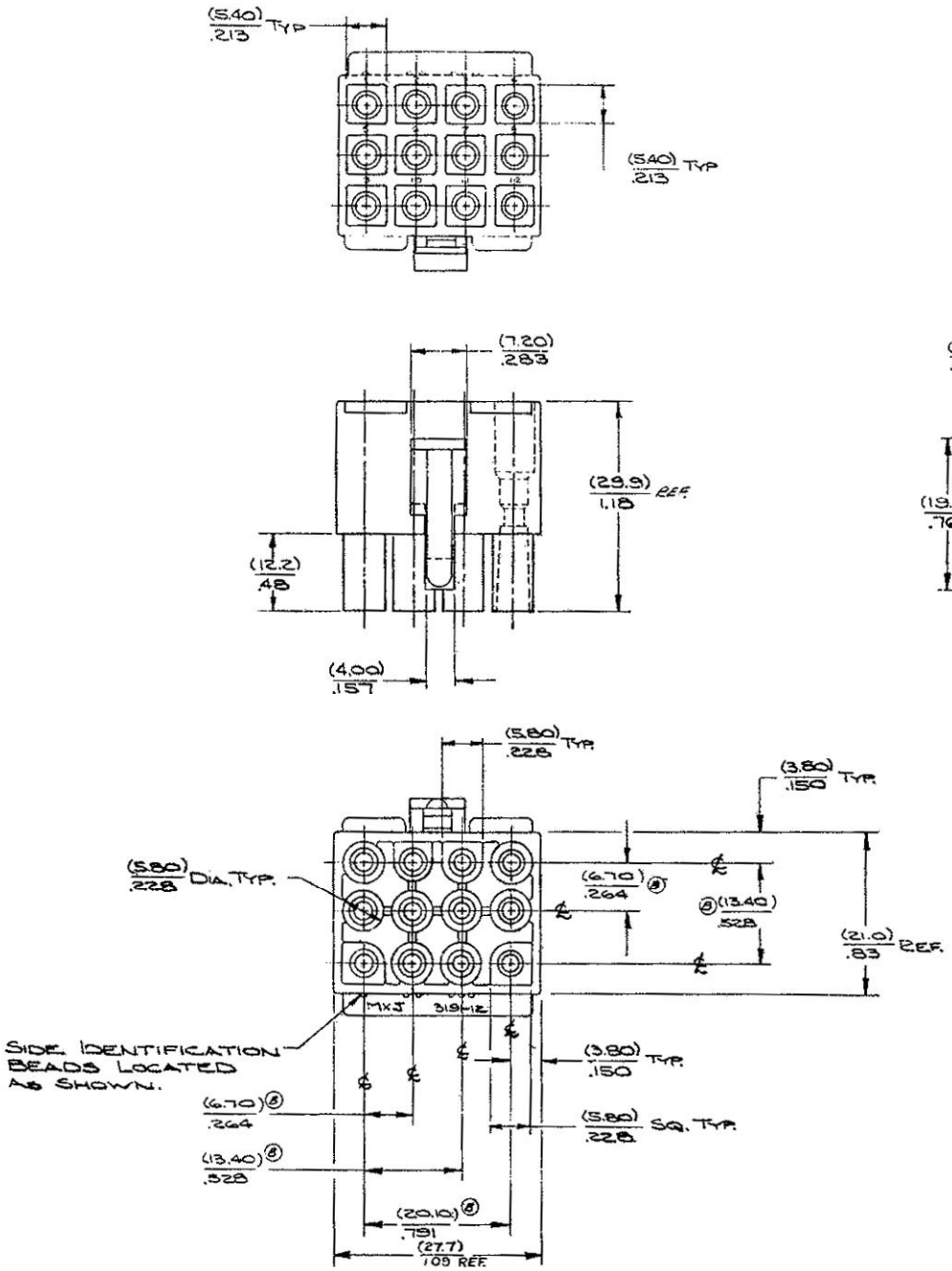

PART NO. 19-**-1127
SD-3191-1221-*

NOTE:
THIS HOUSING FOR USE WITH MOLEX (2.36)/.093 DIA. FEMALE TERMINALS.

NOT TOOLED	SDX-3191-1221-D	NYLON 6/6, 94V-2 COLOR NATURAL. (-D INDICATES DYED)
19-09-3121	SD-3191-1221-203	ASAHI LEONA FR-200
NOT TOOLED	SDX-3191-1221-202	MOD. NYLON 6/6 94V-0 DUPONT FE-20/6
NOT TOOLED	SDX-3191-1221-200	MOD. NYLON 6/6, 94V-0, MONSANTO M340
19-09-1126	SD-3191-1221-201	MOD. NYLON 6/6, 94V-0, WELLAMID FR22-FA
19-09-1129	SD-3191-1221	NYLON 6/6, 94V-2
PART NO.	ENG. NO.	MATERIAL

LTR.	REVISIONS
G1	ADDED PART: 3191-1221-D PER ECO #28531 8-3-85 JB
G	ADDED RIB TO BOSS PER ECO #4095 8-8-79 JDK
F	ADDED RELEASE 203 (NYL. MOLDED) PER INC #1045 7-2-79 JDK
E1	ADDED NEW MATL PER ECO #3653 JDK 5-2-79
E	CHANGED ECO NO. 2221 X-4-78 PS
D	X RELEASE ECO NO. 4087X 1/21/77
C	X-RELEASE 1157X ECO NO. 2670X 1/21/76
B	X-RELEASE ECO NO. 4087X 1/21/76
A	X-RELEASE 4087X 1/21/76
-	

DIMENSIONS SHOWN (METRIC/INCH) UNLESS OTHERWISE SPECIFIED TOLERANCE: INCH .XX ±.010 .XXX ±.005 .XXXX ±.0025 ANGULAR ±1/2° DRAFT MARKS APPLICABLE MUST REMAIN WITHIN DIMENSIONS UNLESS OTHERWISE SPECIFIED DO NOT SCALE DRAWING

DRWN BY W.E.L. CHK'D BY RAS 2X

TITLE: HOUSING RECEPTACLE, 12 CKT. (UNIVERSAL)

MOLEX INCORPORATED LISLE, ILL. SPARS U.S.A.

DATE 10/27/78

PART NO. 19-**-1127 DWG. NO. SD-3191-1221-* C

AGFO

THIS DRAWING CONTAINS INFORMATION THAT IS PROPRIETARY TO MOLEX INC. AND SHOULD NOT BE USED WITHOUT WRITTEN PERMISSION.

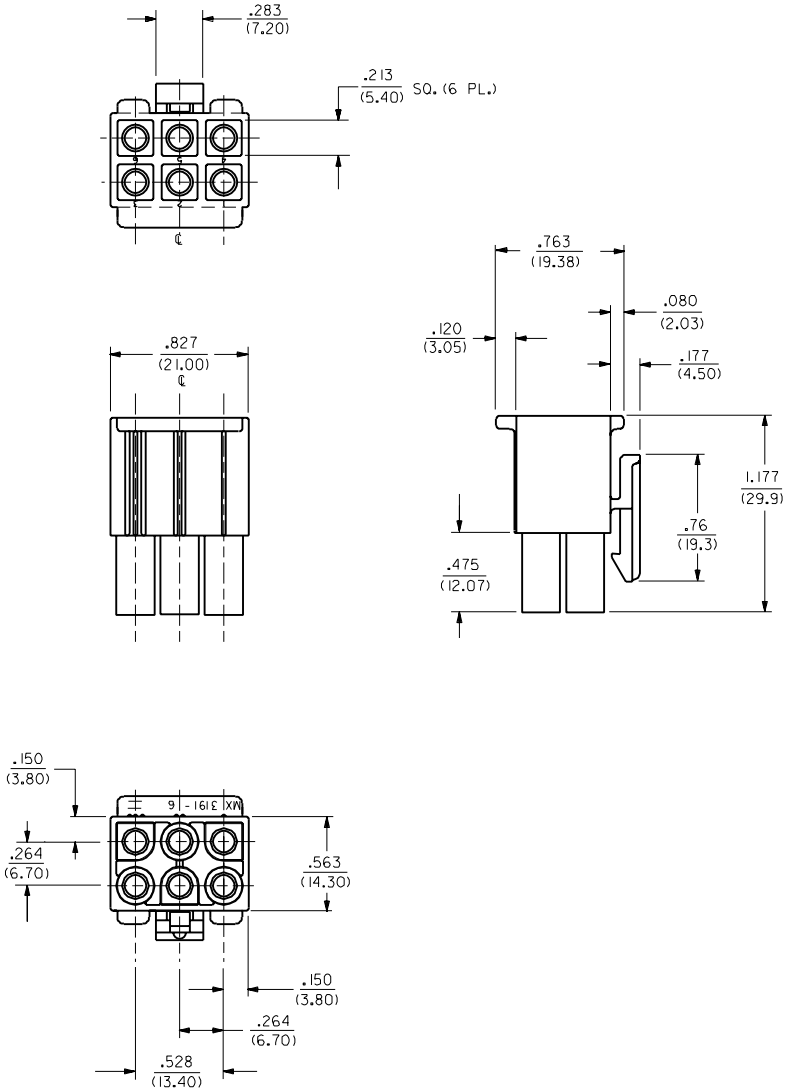

RECEPTACLE

LTR.	REVISIONS	LTR.	REVISIONS
		J	SEE SHT 1

DIMENSIONS SHOWN (METRIC) INCH
UNLESS OTHERWISE SPECIFIED TOLERANCES: ANGULAR ± 30' 10

	INCH	METRIC
3 PLACE	± .010	---
2 PLACE	± .014	± 0.25
1 PLACE	---	± 0.36

DRAFT WHERE APPLICABLE MUST REMAIN WITHIN DIMENSIONS

DRWG. BY JJS | CHK'D. BY RW
APP'D. BY RAS | SCALE 2:1

▽ = ▼ = REVISE ONLY ON CAD SYSTEM

TITLE .093/(2.36) HOUSING
PLUG AND RECEPTACLE
6 CIRCUIT,.264/(6.70)CTRS

MOLEX INCORPORATED
LISLE, ILL. 60532 U.S.A.

SHEET NO. 2 | DATE 1/22/88

PART NO. SEE SHEET 3 | DRWG. NO. SD-3191-6•

FILE NAME S31916 X2

THIS DRAWING CONTAINS INFORMATION THAT IS PROPRIETARY TO MOLEX INC. AND SHOULD NOT BE USED WITHOUT WRITTEN PERMISSION.

DIV. | SIZE C

PLUG	
PART NO.	ENG. NO.
19-09-2068	3191-6P
19-09-2069	3191-6P1
19-09-2067	3191-6P-201
19-09-2066	3191-6P1-201
19-09-7069	3191-6PRD
19-09-7068	3191-6PBK

RECEPTACLE	
PART NO.	ENG. NO.
19-09-1069	3191-6R1
19-09-1066	3191-6R1-201
19-09-6060	3191-6R1RD
19-09-6069	3191-6R1BK

LEGEND:

3191-6****-*

CIRCUIT SIZE

P = PLUG
R = RECEPTACLE

EARS: BLANK = WITH PREBENT EARS (PLUG ONLY)
1 = WITHOUT EARS

COLOR: BLANK = NATURAL COLOR
AM=AMBER BK=BLACK BU=BLUE
BN=BROWN GY=GRAY GN=GREEN
OR=ORANGE RD=RED YW=YELLOW
COLORS AVAILABLE ONLY IN 94V-2 MATERIAL

MATERIAL: BLANK=NYLON TYPE 6/6, 94V-2
201=NYLON TYPE 6/6, 94V-0

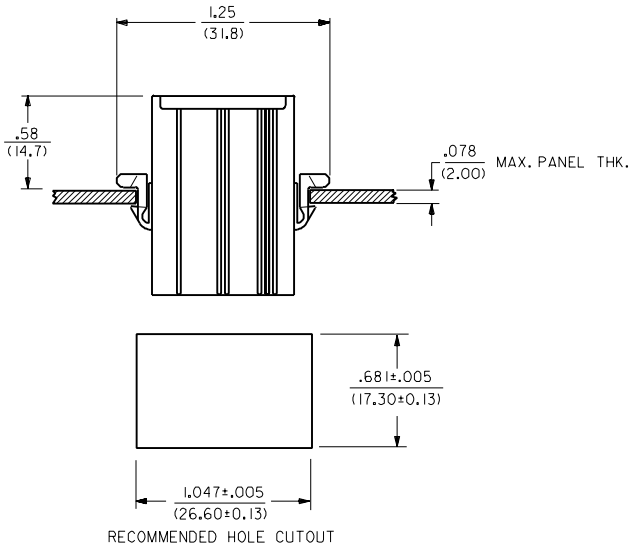

MOUNTING
HOLE DETAIL

LTR.	REVISIONS	LTR.	REVISIONS
		M	SEE SHEET 1
		L	SEE SHT. 1
		K	SEE SHT. 1
		J	SEE SHT. 1

DIMENSIONS SHOWN (METRIC) INCH
UNLESS OTHERWISE SPECIFIED TOLERANCES: ANGULAR ± 0°

	INCH	METRIC
3 PLACE	± .010	---
2 PLACE	± .014	± 0.25
1 PLACE	---	± 0.36

DRAFT WHERE APPLICABLE MUST REMAIN WITHIN DIMENSIONS

DRWG. BY JJS CHK'D. BY RW
APP'D. BY RAS SCALE --:--

REVISE ONLY ON CAD SYSTEM

TITLE .093/(2.36) HOUSINGS
PLUG AND RECEPTACLE
6 CKT., .264/(6.70) CTRS.

MOLEX INCORPORATED
LISLE, ILL. 60532 U.S.A.

SHEET NO. 3 DATE 1/22/88

PART NO. SEE CHART DRWG. NO. SD-3191-6•

FILE NAME S3191GX3 DGN

THIS DRAWING CONTAINS INFORMATION THAT IS PROPRIETARY TO MOLEX INC. AND SHOULD NOT BE USED WITHOUT WRITTEN PERMISSION.

DIV. CP SIZE C

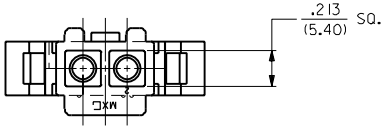

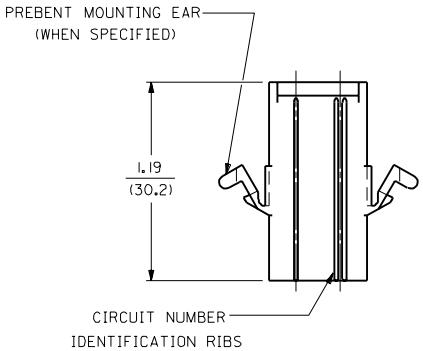

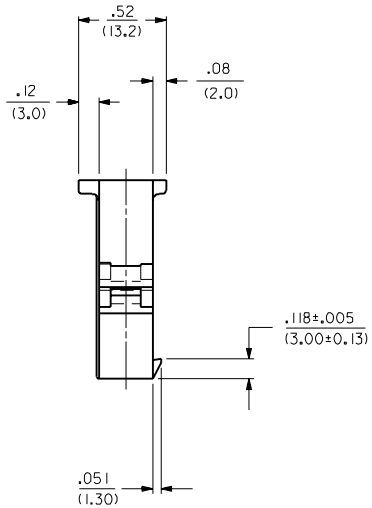

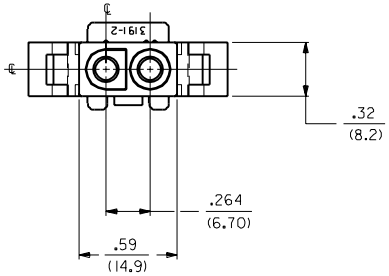

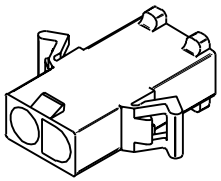

PLUG

REV.	SH.	REV.	LTR.	REVISIONS
			E4	REVISED UCR1998-0148 WANG 98-04-15
			E3	ADD RAMP DIM'S ECN #U4 0293 3-1-94 RW
			E2	X-REMOVE ECR U3 0001 GC 12/30/92 RW
			E1	REL. RED VERSIONS ECR U1 2167 GC 1/24/92 RW
			E	REV MATL CODE ECR # U90901 KBW 07-25-89 RW
	3	E2	D	REV. & REDRAWN ECR U8 1858 GEP 11-21-88 RW
	2	D		
	1	E4		

DIMENSIONS SHOWN (METRIC) INCH

UNLESS OTHERWISE SPECIFIED TOLERANCES: ANGULAR ± 0°30'

	INCH	METRIC
3 PLACE	± .010	---
2 PLACE	± .014	± 0.25
1 PLACE	---	± 0.35

DRAFT WHERE APPLICABLE MUST REMAIN WITHIN DIMENSIONS

▽ = 0 ▼ = 0 REVISE ONLY ON CAD SYSTEM

TITLE .093/(2.36) HOUSING, PLUG AND RECEPTACLE, 2 CKT., .264/(6.70) CTRS.

MOLEX INCORPORATED LISLE, ILL. 60532 U.S.A.

SHEET NO. 1 of 3 DATE 11/21/88

PART NO. SEE CHART DRWG. NO. SD-3191-2•

DRWG. BY GEP CHK'D. BY RW APP'D. BY RAS SCALE 2 : 1

FILE NAME S3191 2X1 DGN

THIS DRAWING CONTAINS INFORMATION THAT IS PROPRIETARY TO MOLEX INC. AND SHOULD NOT BE USED WITHOUT WRITTEN PERMISSION

DIV. CP SIZE C

NO P.S.

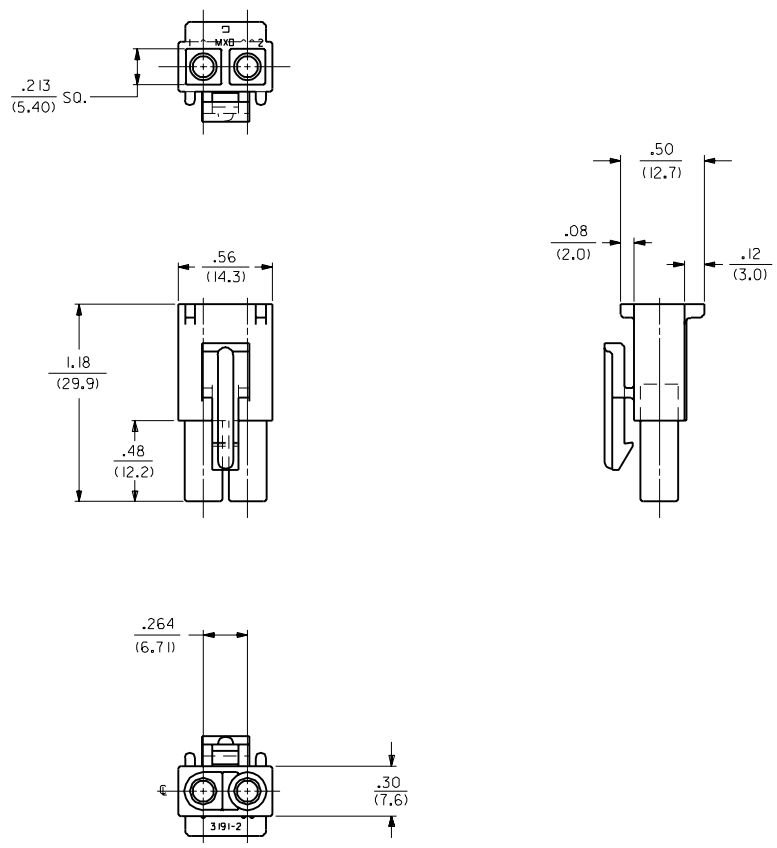

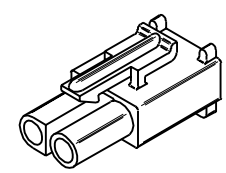

RECEPTACLE

LTR.	REVISIONS	LTR.	REVISIONS
		D	SEE SHT. 1

DIMENSIONS SHOWN (METRIC) INCH

UNLESS OTHERWISE SPECIFIED TOLERANCES: ANGULAR ± 1/2° 1°

	INCH	METRIC
3 PLACE	± .010	---
2 PLACE	± .014	± 0.25
1 PLACE	---	± 0.35

DRAFT WHERE APPLICABLE MUST REMAIN WITHIN DIMENSIONS

DRWG. BY GEP | CHK'D. BY RW | APP'D. BY RAS | SCALE 2 : 1

REVISE ONLY ON CAD SYSTEM

TITLE .093/(2.36) HOUSING, PLUG AND RECEPTACLE, 2 CKT., .264/(6.70) CTRS.

MOLEX INCORPORATED LISLE, ILL. 60532 U.S.A.

SHEET NO. 2 | DATE 11/21/88

PART NO. SEE CHART | DRWG. NO. SD-3191-2*

FILE NAME S31912X2

THIS DRAWING CONTAINS INFORMATION THAT IS PROPRIETARY TO MOLEX INC. AND SHOULD NOT BE USED WITHOUT WRITTEN PERMISSION.

DIV. CP | SIZE C

NO P.S.

PLUG		RECEPTACLE	
PART NO.	ENG. NO.	PART NO.	ENG. NO.
19-09-2028	3191-2P	19-09-1029	3191-2R1
19-09-2029	3191-2P1	19-09-1026	3191-2R1-201
19-09-2027	3191-2P-201	19-09-1020	3191-2RIRD
19-09-2026	3191-2P1-201	19-09-1021	3191-2RIBU
19-09-2020	3191-2PIRD		
19-09-2021	3191-2PIBU		

LEGEND:

3191-2****-*

CIRCUIT SIZE

P = PLUG
R = RECEPTACLE

EARS: BLANK = WITH PREBENT EARS (PLUG ONLY)
1 = WITHOUT EARS

COLOR: BLANK = NATURAL COLOR
AM=AMBER BK=BLACK BU=BLUE
BN=BROWN GY=GRAY GN=GREEN
OR=ORANGE RD=RED YW=YELLOW

MATERIAL: BLANK=NYLON TYPE 6/6, 94V-2
201=NYLON TYPE 6/6, 94V-0

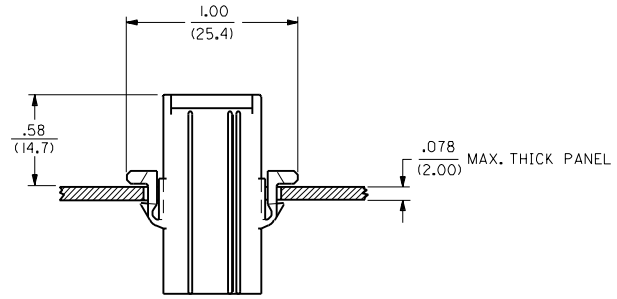

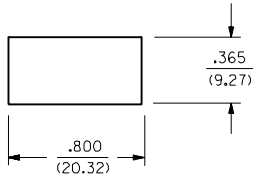

RECOMMENDED HOLE CUTOUT

NOTES:

1. THESE HOUSINGS FOR USE WITH MOLEX .093/(2.36) DIAMETER SERIES TERMINALS.

LTR.	REVISIONS	LTR.	REVISIONS
		E2	SEE SHEET 1
		E1	SEE SHEET 1
		E	SEE SHEET 1
		D	SEE SHEET 1

DIMENSIONS SHOWN (METRIC) INCH
UNLESS OTHERWISE SPECIFIED TOLERANCES: ANGULAR ± 0°

	INCH	METRIC
3 PLACE	± .010	---
2 PLACE	± .014	± 0.25
1 PLACE	---	± 0.35

DRAFT WHERE APPLICABLE MUST REMAIN WITHIN DIMENSIONS

DRWG. BY GEP CHK'D. BY RW
APP'D. BY RAS SCALE --:--

▽ = 0 ▼ = 0 REVISE ONLY ON CAD SYSTEM

TITLE .093/(2.36) HOUSINGS PLUG AND RECEPTACLE 2 CKT., .264/(6.70) CTRS.

MOLEX INCORPORATED LISLE, ILL. 60532 U.S.A.

SHEET NO. 3 DATE 11/21/88

PART NO. SEE CHART DRWG. NO. SD-3191-2•

FILE NAME 53192X3.DGN

THIS DRAWING CONTAINS INFORMATION THAT IS PROPRIETARY TO MOLEX INC. AND SHOULD NOT BE USED WITHOUT WRITTEN PERMISSION.

DIV. CP SIZE C

NO P.S. 1

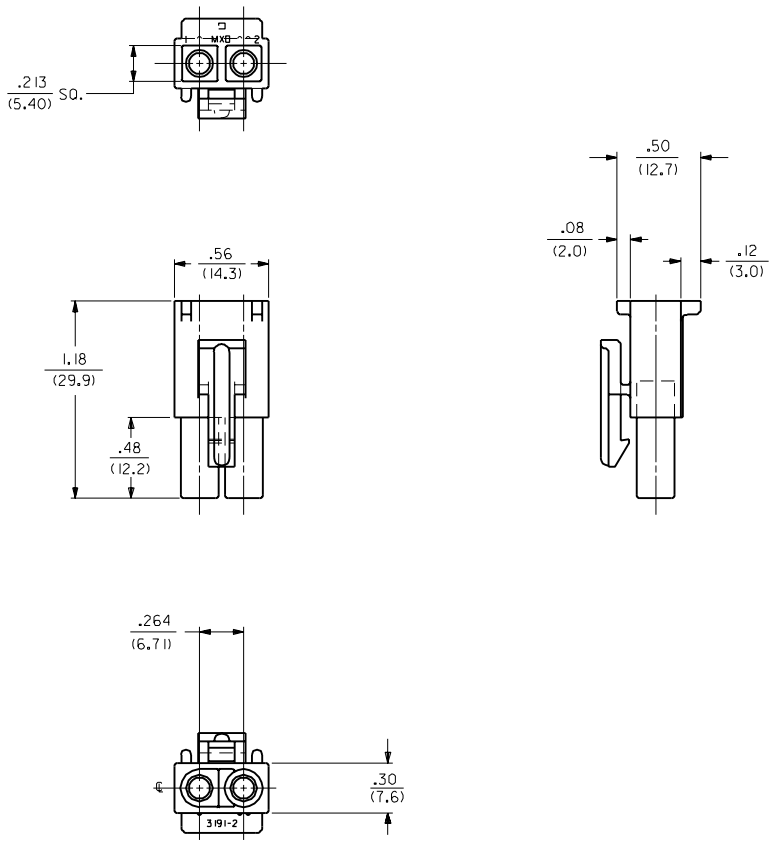

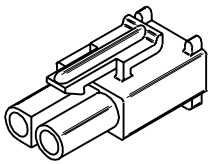

RECEPTACLE

LTR.	REVISIONS	LTR.	REVISIONS
		D	SEE SHT. 1

DIMENSIONS SHOWN (METRIC) INCH

UNLESS OTHERWISE SPECIFIED TOLERANCES: ANGULAR ± 1/2° 1°

	INCH	METRIC
3 PLACE	± .010	---
2 PLACE	± .014	± 0.25
1 PLACE	---	± 0.35

DRAFT WHERE APPLICABLE MUST REMAIN WITHIN DIMENSIONS

DRWG. BY GEP | CHK'D. BY RW
APP'D. BY RAS | SCALE 2 : 1

REVISE ONLY ON CAD SYSTEM

TITLE .093/(2.36) HOUSING, PLUG AND RECEPTACLE, 2 CKT., .264/(6.70) CTRS.

MOLEX INCORPORATED LISLE, ILL. 60532 U.S.A.

SHEET NO. 2 | DATE 11/21/88

PART NO. SEE CHART | DRWG. NO. SD-3191-2*

FILE NAME S31912X2

THIS DRAWING CONTAINS INFORMATION THAT IS PROPRIETARY TO MOLEX INC. AND SHOULD NOT BE USED WITHOUT WRITTEN PERMISSION.

DIV. CP | SIZE C

NO P.S.

PLUG		RECEPTACLE	
PART NO.	ENG. NO.	PART NO.	ENG. NO.
19-09-2028	3191-2P	19-09-1029	3191-2R1
19-09-2029	3191-2P1	19-09-1026	3191-2R1-201
19-09-2027	3191-2P-201	19-09-1020	3191-2RIRD
19-09-2026	3191-2P1-201	19-09-1021	3191-2RIBU
19-09-2020	3191-2PIRD		
19-09-2021	3191-2PIBU		

LEGEND:

3191-2****-*

CIRCUIT SIZE

P = PLUG
R = RECEPTACLE

EARS: BLANK = WITH PREBENT EARS (PLUG ONLY)
1 = WITHOUT EARS

COLOR: BLANK = NATURAL COLOR
AM=AMBER BK=BLACK BU=BLUE
BN=BROWN GY=GRAY GN=GREEN
OR=ORANGE RD=RED YW=YELLOW

MATERIAL: BLANK=NYLON TYPE 6/6, 94V-2
201=NYLON TYPE 6/6, 94V-0

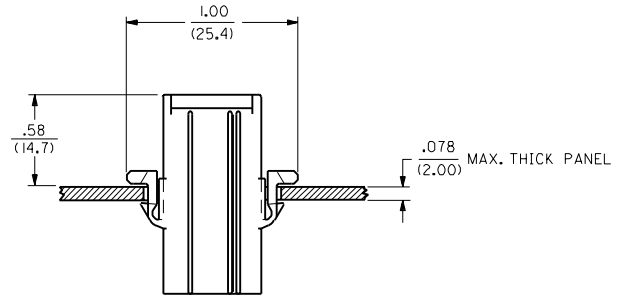

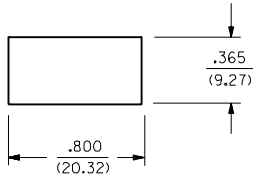

RECOMMENDED HOLE CUTOUT

NOTES:

1. THESE HOUSINGS FOR USE WITH MOLEX .093/(2.36) DIAMETER SERIES TERMINALS.

LTR.	REVISIONS	LTR.	REVISIONS
		E2	SEE SHEET 1
		E1	SEE SHEET 1
		E	SEE SHEET 1
		D	SEE SHEET 1

DIMENSIONS SHOWN (METRIC) INCH
UNLESS OTHERWISE SPECIFIED TOLERANCES: ANGULAR ± 0°

	INCH	METRIC
3 PLACE	± .010	---
2 PLACE	± .014	± 0.25
1 PLACE	---	± 0.35

DRAFT WHERE APPLICABLE MUST REMAIN WITHIN DIMENSIONS

DRWG. BY GEP CHK'D. BY RW
APP'D. BY RAS SCALE --:--

▽ = 0 ▼ = 0 REVISE ONLY ON CAD SYSTEM

TITLE .093/(2.36) HOUSINGS PLUG AND RECEPTACLE 2 CKT., .264/(6.70) CTRS.

MOLEX INCORPORATED LISLE, ILL. 60532 U.S.A.

SHEET NO. 3 DATE 11/21/88

PART NO. SEE CHART DRWG. NO. SD-3191-2•

FILE NAME 53192X3.DGN

THIS DRAWING CONTAINS INFORMATION THAT IS PROPRIETARY TO MOLEX INC. AND SHOULD NOT BE USED WITHOUT WRITTEN PERMISSION.

DIV. CP SIZE C

NO P.S. 1

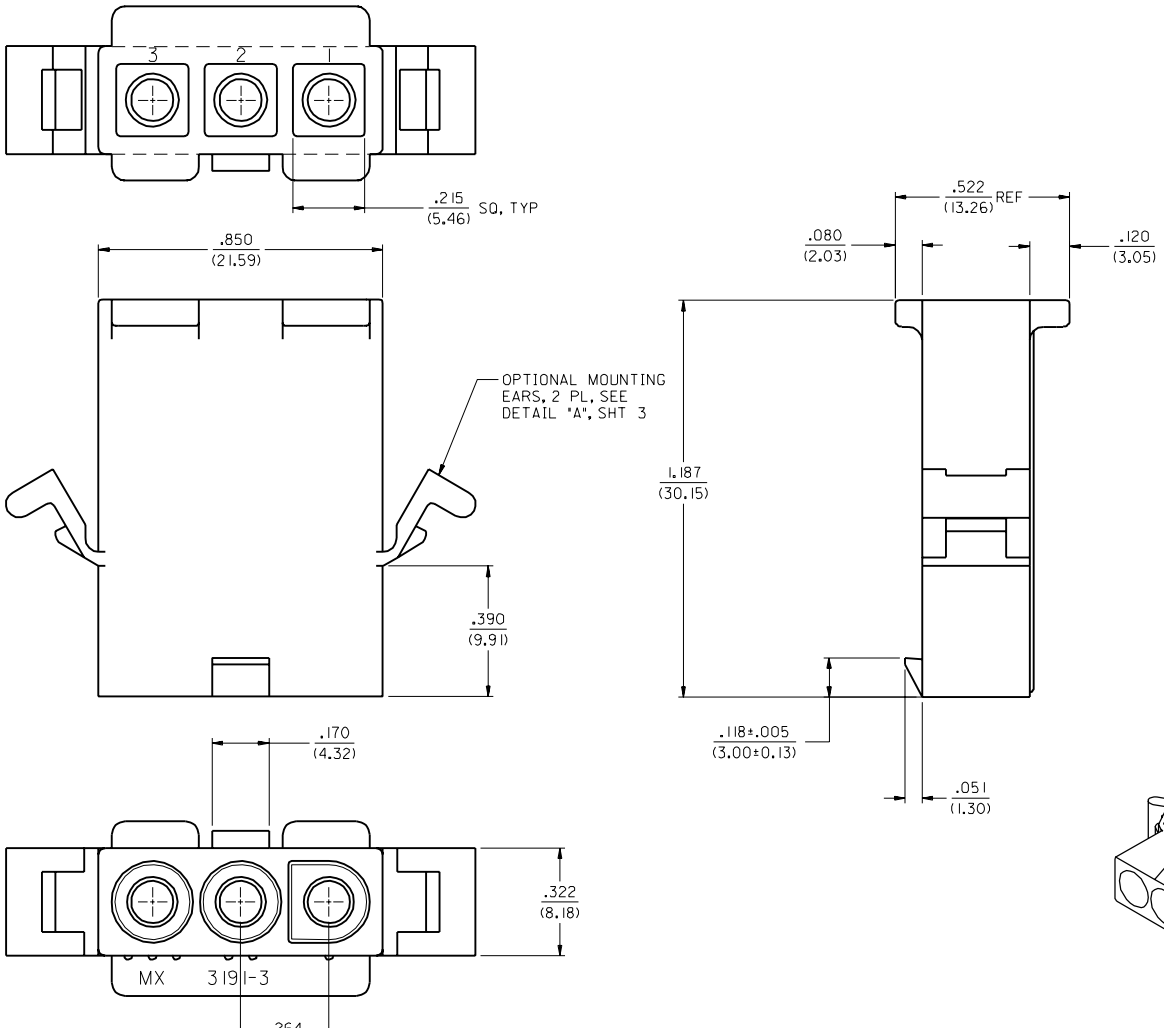

MFG.	SH.	REV.	LTR.	REVISIONS
	3	J5	J5	REDRAWN ON CAD ECR U6-0734 GC 1/8/96 RW
	2	J5		
	1	J5		

REVISE ONLY ON CAD SYSTEM

DIMENSIONS SHOWN (METRIC) INCH

UNLESS OTHERWISE SPECIFIED TOLERANCES: ANGULAR ± 1/2°

	INCH	METRIC
3 PLACE	± .010	---
2 PLACE	± .015	± 0.25
1 PLACE	---	± 0.38

DRAFT WHERE APPLICABLE MUST REMAIN WITHIN DIMENSIONS

TITLE
.093/(2.36) HOUSING
PLUG AND RECEPTACLE
3 CKT., .264/(6.71) CTRS.

MOLEX INCORPORATED
LISLE, ILL. 60532 U.S.A.

SHEET NO. 1 of 3
DATE 1/ 8/96

PART NO. SEE CHART
DRWG. NO. SD-3191-3•

DRWG. BY GC
CHK'D. BY RW
APP'D. BY RAS
SCALE 4 : 1

FILE NAME S3191-3X1 DGN

THIS DRAWING CONTAINS INFORMATION THAT IS PROPRIETARY to MOLEX INC. AND SHOULD NOT BE USED WITHOUT WRITTEN PERMISSION.

DIV. CP
SIZE C

NO P.S.

3191

PLUG	
PART NO.	ENG. NO.
19-09-2038	3191-3P
19-09-2039	3191-3P1
19-09-2037	3191-3P-201
19-09-2036	3191-3P1-201
19-09-1038	3191-3P1RD
19-09-3032	3191-3PRD
19-09-3033	3191-3PBU

RECEPTACLE	
PART NO.	ENG. NO.
19-09-1039	3191-3R1
19-09-1036	3191-3R1-201
19-09-3030	3191-3R1RD

LEGEND

3191-3****-*

CIRCUIT SIZE

P = PLUG
R = RECEPTACLE

EARS: BLANK = WITH PREBENT EARS (PLUG ONLY)
1 = WITHOUT EARS

COLOR: BLANK = NATURAL COLOR
AM=AMBER BK=BLACK BU=BLUE
BN=BROWN GY=GRAY GN=GREEN
OR=ORANGE RD=RED YW=YELLOW
COLORS AVAILABLE ONLY IN 94V-2 MATERIAL

MATERIAL: BLANK=NYLON TYPE 6/6,94V-2
201=NYLON TYPE 6/6,94V-0

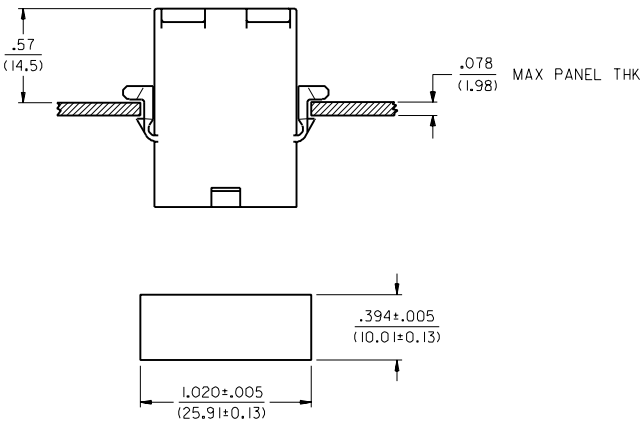

RECOMMENDED HOLE CUTOUT

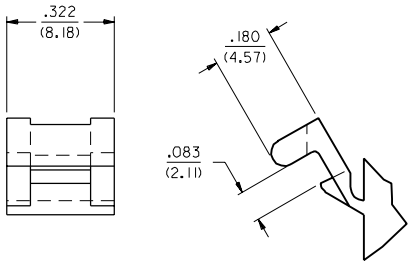

DETAIL "A"
PREBENT MOUNTING EAR
(SCALE 4:1)

LTR.	REVISIONS	LTR.	REVISIONS
		J5	SEE SHEET 1

DIMENSIONS SHOWN (METRIC) INCH
UNLESS OTHERWISE SPECIFIED TOLERANCES: ANGULAR ± 1/2°

	INCH	METRIC
3 PLACE	± .010	---
2 PLACE	± .015	± 0.25
1 PLACE	---	± 0.38

DRAFT WHERE APPLICABLE MUST REMAIN WITHIN DIMENSIONS

DRWG. BY GK CHK'D. BY RW
APP'D. BY RAS SCALE --:--

REVISE ONLY ON CAD SYSTEM

TITLE .093/(2.36) HOUSINGS
PLUG AND RECEPTACLE
3 CKT. @ .264/(6.71) CTRS.

MOLEX INCORPORATED
LISLE, ILL. 60532 U.S.A.

SHEET NO. 3 DATE 1/8/96

PART NO. SEE CHART DRWG. NO. SD-3191-3•

FILE NAME 53191X3.DGN

THIS DRAWING CONTAINS INFORMATION THAT IS PROPRIETARY TO MOLEX INC. AND SHOULD NOT BE USED WITHOUT WRITTEN PERMISSION.

DIV. CP SIZE C

NO P.S.

PLUG	
PART NO.	ENG. NO.
19-09-2038	3191-3P
19-09-2039	3191-3P1
19-09-2037	3191-3P-201
19-09-2036	3191-3P1-201
19-09-1038	3191-3P1RD
19-09-3032	3191-3PRD
19-09-3033	3191-3PBU

RECEPTACLE	
PART NO.	ENG. NO.
19-09-1039	3191-3R1
19-09-1036	3191-3R1-201
19-09-3030	3191-3R1RD

LEGEND

3191-3****-*

CIRCUIT SIZE

P = PLUG
R = RECEPTACLE

EARS: BLANK = WITH PREBENT EARS (PLUG ONLY)
1 = WITHOUT EARS

COLOR: BLANK = NATURAL COLOR
AM=AMBER BK=BLACK BU=BLUE
BN=BROWN GY=GRAY GN=GREEN
OR=ORANGE RD=RED YW=YELLOW
COLORS AVAILABLE ONLY IN 94V-2 MATERIAL

MATERIAL: BLANK=NYLON TYPE 6/6,94V-2
201=NYLON TYPE 6/6, 94V-0

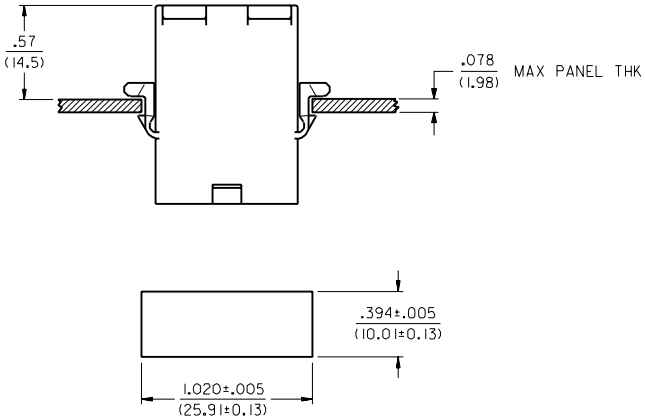

RECOMMENDED HOLE CUTOUT

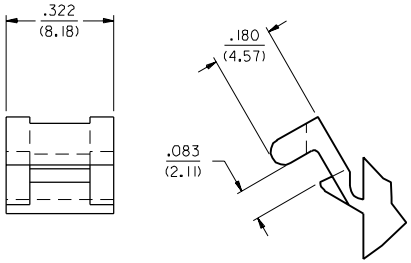

DETAIL "A"

PREBENT MOUNTING EAR
(SCALE 4:1)

LTR.	REVISIONS	LTR.	REVISIONS
		J5	SEE SHEET 1

DIMENSIONS SHOWN (METRIC) INCH
UNLESS OTHERWISE SPECIFIED TOLERANCES: ANGULAR ± 1/2°

	INCH	METRIC
3 PLACE	± .010	---
2 PLACE	± .015	± 0.25
1 PLACE	---	± 0.38

DRAFT WHERE APPLICABLE MUST REMAIN WITHIN DIMENSIONS

DRWG. BY GK CHK'D. BY RW
APP'D. BY RAS SCALE --:--

▽ = 0 ▼ = 0 REVISE ONLY ON CAD SYSTEM

TITLE .093/(2.36) HOUSINGS PLUG AND RECEPTACLE 3 CKT. @ .264/(6.71) CTRS.

MOLEX INCORPORATED LISLE, ILL. 60532 U.S.A.

SHEET NO. 3 DATE 1/ 8/96

PART NO. SEE CHART DRWG. NO. SD-3191-3*

FILE NAME S3191SX3 DGN

THIS DRAWING CONTAINS INFORMATION THAT IS PROPRIETARY TO MOLEX INC. AND SHOULD NOT BE USED WITHOUT WRITTEN PERMISSION

DIV. CP SIZE C

NO P.S.

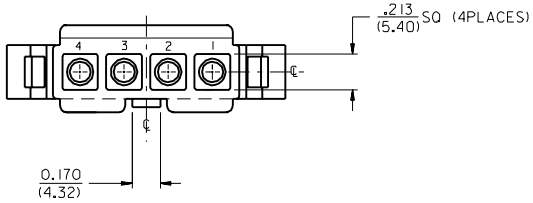

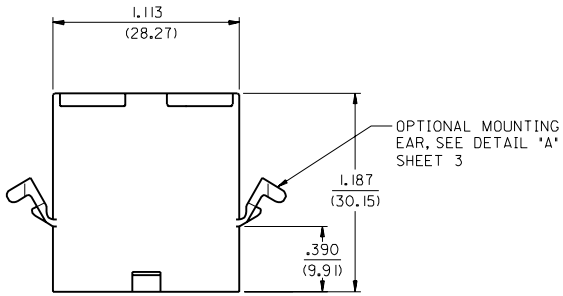

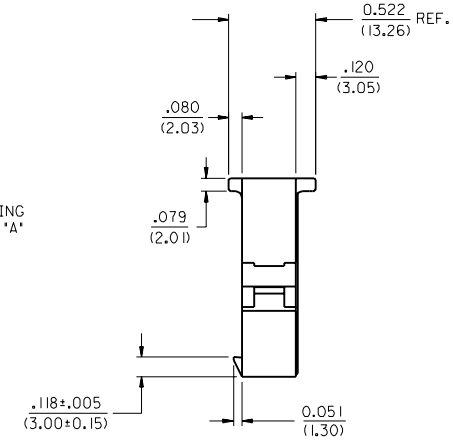

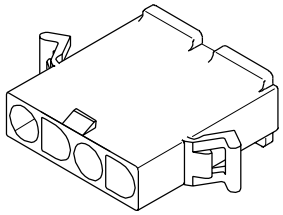

PLUG HOUSING

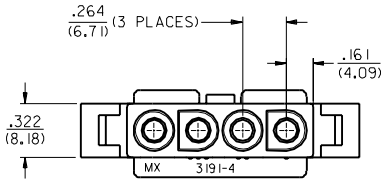

SHT	REV
3	J3
2	J3
1	J3

REVISE ON CAD ONLY

REDRAWN ON CAD
EC NO. UCR1998-0254
DRWN: J. WANG 00/06/07
CH'K: WIRKUS 00/06/07
APPR: R.EDGLEY 00/06/07
DESCRIPTION
J3
REV

QUALITY SYMBOLS
MAJOR ▼=0
CRITICAL C=0

GENERAL TOLERANCES: (UNLESS SPECIFIED)

	mm	INCH
4 PLACES	±0.---	±.---
3 PLACES	±0.---	±.010
2 PLACES	±0.25	±.015
1 PLACE	±0.38	±.---

ANGULAR: ±1 °

DRAFT WHERE APPLICABLE MUST REMAIN WITHIN DIMENSIONS

SCALE 2 : 1
DESIGN UNITS ☐mm ☒INCH
THIRD ANGLE PROJECTION
DIMENSIONS: ☐ mm/INCH ☒ INCH/mm ☐ mm ONLY

DRAWN BY & DATE J. WANG 98/08/24
CHECKED BY & DATE WIRKUS 98/08/24
APPROVED BY & DATE R.EDGLEY 98/08/24

TITLE: .093/(2.36) HOUSINGS
PLUG AND RECEPTACLE
4-CKTS, .264/(6.70) CTRS

molex MOLEX INCORPORATED

CAD FILENAME S3191401.DGN
MATERIAL NO. SEE SHT. 3
DRAWING NO. SD -3191 -4*
SHEET NO. 1 OF 3
SIZE C

THIS DRAWING CONTAINS INFORMATION THAT IS PROPRIETARY TO MOLEX INCORPORATED AND SHOULD NOT BE USED WITHOUT WRITTEN PERMISSION.

3191

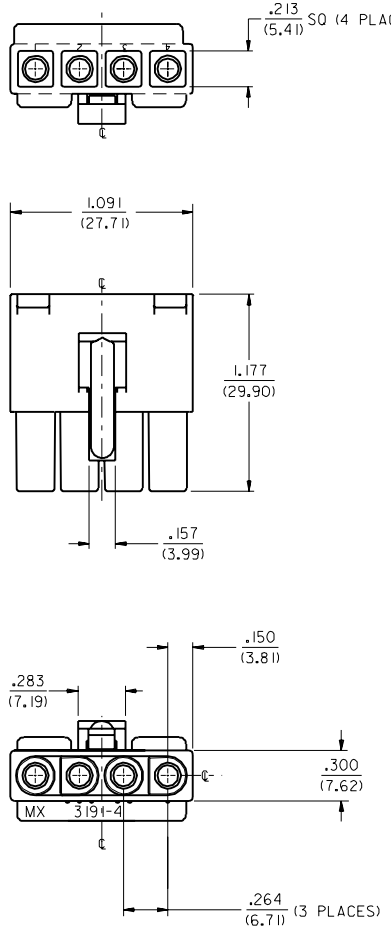

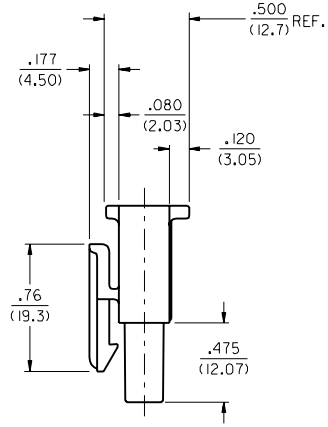

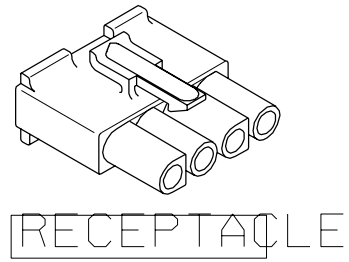

EC NO. UCR 1998-0254	QUALITY SYMBOLS	GENERAL TOLERANCES: (UNLESS SPECIFIED)	SCALE 2 : 1
DRWN: J.WANG 000607	MAJOR ▼=0		DESIGN UNITS ☐mm ☒INCH
CH'K: B.WIRKUS 000607	CRITICAL (C)=0		THIRD ANGLE PROJECTION
APPR: R.EDGLE 000607			DIMENSIONS: ☐ mm/INCH ☒ INCH/mm ☐ mm ONLY
DESCRIPTION			SHT / REV: REVISE ON CAD ONLY

	mm	INCH
4 PLACES	±0.---	±.---
3 PLACES	±0.---	±.010
2 PLACES	±0.25	±.015
1 PLACE	±0.38	±.---
ANGULAR: ±1 °		

DRAFT WHERE APPLICABLE MUST REMAIN WITHIN DIMENSIONS

DRAWN BY & DATE: J.WANG 98/08/24
CHECKED BY & DATE: B.WIRKUS 98/08/24
APPROVED BY & DATE: R.EDGLEY 98/08/24

TITLE: .093/(2.36) HOUSINGS PLUG AND RECEPTACLE 4 CKT., .264/(6.70) CTRS

molex MOLEX INCORPORATED

CAD FILENAME: S3191402.DGN
MATERIAL NO.: SEE SHT.3
DRAWING NO.: SD -3191 -4*
SHEET NO.: 2
SIZE: C

REV: J3

THIS DRAWING CONTAINS INFORMATION THAT IS PROPRIETARY TO MOLEX INCORPORATED AND SHOULD NOT BE USED WITHOUT WRITTEN PERMISSION.

LBORD.DGN REV A 96/06/12 LEVEL 5

3191

PLUG	
PART NO.	ENG. NO.
19-09-2048	3191-4P
19-09-2049	3191-4P1
19-09-2047	3191-4P-A
19-09-2046	3191-4P1-A

RECEPTACLE	
PART NO.	ENG. NO.
19-09-1049	3191-4R1
19-09-1046	3191-4R1-A

LEGEND

3191-4***-*

CIRCUIT SIZE

P = PLUG
R = RECEPTACLE

EARS: BLANK = WITH PREBENT EARS (PLUG ONLY)
1 = WITHOUT EARS

COLOR: BLANK = NATURAL COLOR
AM=AMBER BK=BLACK BU=BLUE
BN=BROWN GY=GRAY GN=GREEN
OR=ORANGE RD=RED YW=YELLOW
COLORS AVAILABLE ONLY IN 94V-2 MATERIAL

MATERIAL: BLANK=NYLON TYPE 6/6, 94V-2 COLOR:NATURAL
A=NYLON TYPE 6/6, 94V-0 COLOR:WHITE

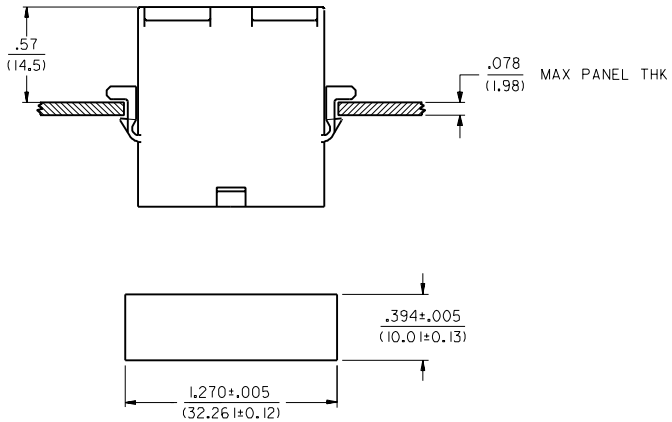

RECOMMENDED HOLE CUTOUT

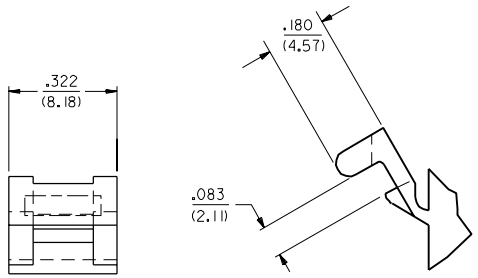

DETAIL "A"
.093/(2.36) PREBENT MOUNTING EAR
(SCALE 4:1)

EC NO. UCR1998-0254
DRWN: J.WANG 000607
CH'K: B.WIRKUS 000607
APPR: R.EDGLEY 000607
DESCRIPTION
J3
REV

QUALITY SYMBOLS
MAJOR =0
CRITICAL C =0

GENERAL TOLERANCES: (UNLESS SPECIFIED)

	mm	INCH
4 PLACES	±0.---	±.---
3 PLACES	±0.---	±.010
2 PLACES	±0.25	±.015
1 PLACE	±0.38	±.---
ANGULAR: ±1 °		

DRAFT WHERE APPLICABLE MUST REMAIN WITHIN DIMENSIONS

SCALE 2 : 1
DESIGN UNITS ☐mm ☒INCH
THIRD ANGLE PROJECTION
DIMENSIONS: ☐ mm/INCH ☒ INCH/mm ☐ mm ONLY
SHT REV
REVISE ON CAD ONLY

DRAWN BY & DATE J.WANG 98/08/18
CHECKED BY & DATE B.WIRKUS 98/08/18
APPROVED BY & DATE R.EDGLEY 98/08/18

TITLE: .093/(2.36) HOUSINGS
PLUG AND RECEPTACLE
4-CKTS, .264/(6.70) CTRS

molex MOLEX INCORPORATED

CAD FILENAME S3191403.DGN
MATERIAL NO. SEE SHT.3
DRAWING NO. SD -3191-4*
SHEET NO. 3
SIZE C

THIS DRAWING CONTAINS INFORMATION THAT IS PROPRIETARY TO MOLEX INCORPORATED AND SHOULD NOT BE USED WITHOUT WRITTEN PERMISSION.

LBORD.DGN REV A
96/06/12 LEVEL 5

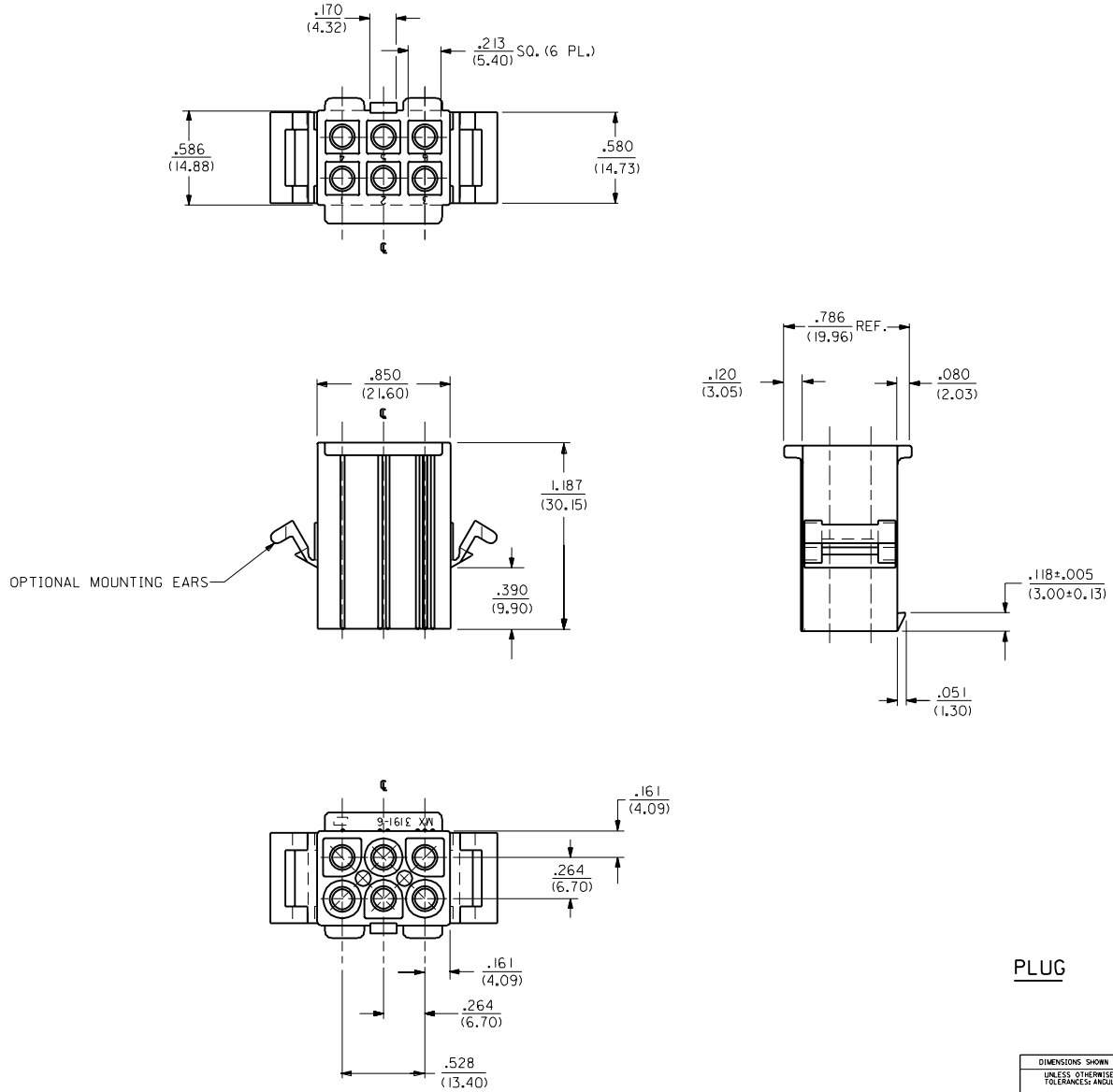

PLUG

MFG.	SH.	REV.	LTR.	REVISIONS
M	3	M	M1	ADD RAMP LENGTH ECN #U4 0293 3-1-94 RW
J	2	J	M	REVISED PER ECR # U90659 KBW 07-25-89 RW
M	1	M1	L	ADDED STANDOFFS PER ECR U8 2271 GEP 11-30-88 RW
			K	REV. & FINAL REL. ECR U8 1710 GEP 7-14-88 RW
			J	REVISED & REDRAWN PER ECR U8 0122 2-2-88 SCHAFER

▽ = 0 ▼ = 0 **REVISE ONLY ON CAD SYSTEM**

DIMENSIONS SHOWN (METRIC) INCH

UNLESS OTHERWISE SPECIFIED TOLERANCES: ANGULAR ± 0°

	INCH	METRIC
3 PLACE	± .010	---
2 PLACE	± .014	± 0.25
1 PLACE	---	± 0.36

DRAFT WHERE APPLICABLE MUST REMAIN WITHIN DIMENSIONS

TITLE .093/(2.36) HOUSING PLUG AND RECEPTACLE 6 CKT. .264/(6.70) CTRS.

MOLEX INCORPORATED LISLE, ILL. 60532 U.S.A.

SHEET NO. 1 OF 3 | DATE 1/25/88

PART NO. SEE CHART | DRWG. NO. SD-3191-6*

DRWG. BY JJS | CHK'D. BY RW | APP'D. BY RAS | SCALE 2 : 1

FILE NAME 3191 6X1 DGN

THIS DRAWING CONTAINS INFORMATION THAT IS PROPRIETARY TO MOLEX INC. AND SHOULD NOT BE USED WITHOUT WRITTEN PERMISSION

DIV. CP | SIZE C

NO P.S.

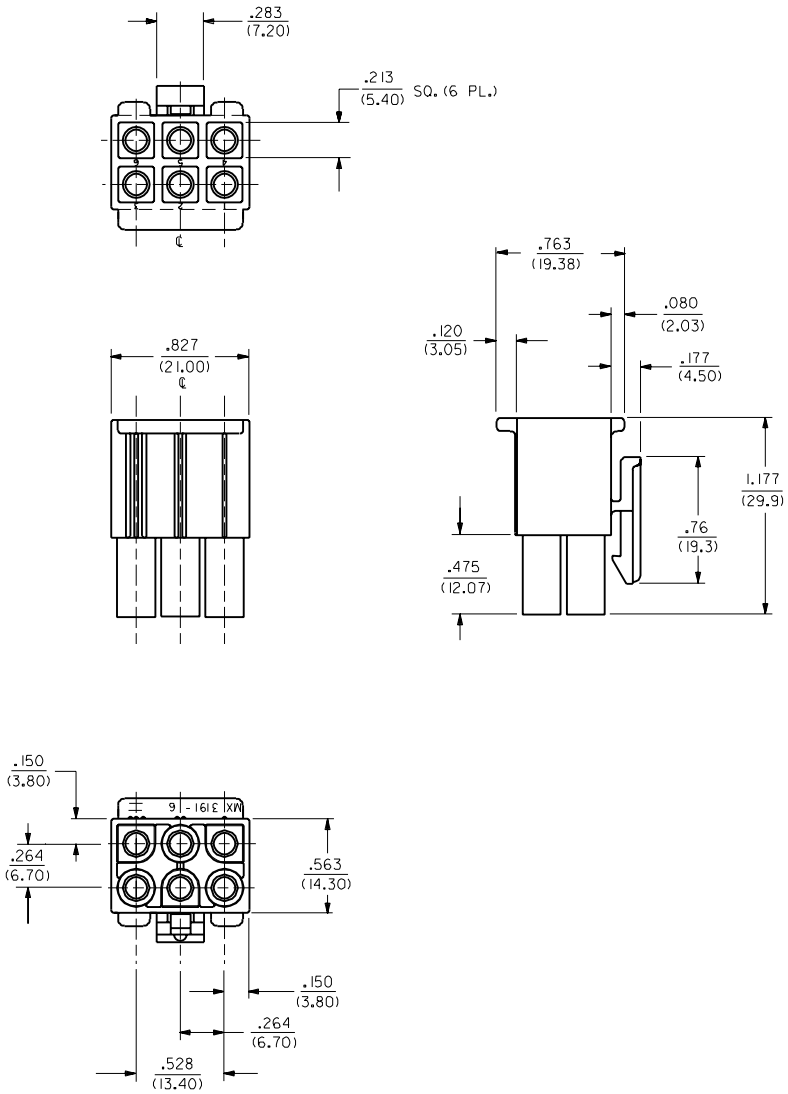

RECEPTACLE

LTR.	REVISIONS	LTR.	REVISIONS
		J	SEE SHT 1

DIMENSIONS SHOWN (METRIC) INCH

UNLESS OTHERWISE SPECIFIED TOLERANCES: ANGULAR ± DEG 10

	INCH	METRIC
3 PLACE	± .010	---
2 PLACE	± .014	± 0.25
1 PLACE	---	± 0.36

DRAFT WHERE APPLICABLE MUST REMAIN WITHIN DIMENSIONS

DRWG. BY JJS | CHK'D. BY RW
APP'D. BY RAS | SCALE 2:1

REVISE ONLY ON CAD SYSTEM

TITLE .093/(2.36) HOUSING PLUG AND RECEPTACLE 6 CIRCUIT,.264/(6.70)CTRS

MOLEX INCORPORATED LISLE,ILL. 60532 U.S.A.

SHEET NO. 2 | DATE 1/22/88

PART NO. SEE SHEET 3 | DRWG. NO. SD-3191-6•

FILE NAME 53196 X2

THIS DRAWING CONTAINS INFORMATION THAT IS PROPRIETARY TO MOLEX INC. AND SHOULD NOT BE USED WITHOUT WRITTEN PERMISSION.

DIV. | SIZE C

PLUG	
PART NO.	ENG. NO.
19-09-2068	3191-6P
19-09-2069	3191-6P1
19-09-2067	3191-6P-201
19-09-2066	3191-6P1-201
19-09-7069	3191-6PRD
19-09-7068	3191-6PBK

RECEPTACLE	
PART NO.	ENG. NO.
19-09-1069	3191-6R1
19-09-1066	3191-6R1-201
19-09-6060	3191-6R1RD
19-09-6069	3191-6R1BK

LEGEND:

3191-6****-*

CIRCUIT SIZE

P = PLUG
R = RECEPTACLE

EARS: BLANK = WITH PREBENT EARS (PLUG ONLY)
1 = WITHOUT EARS

COLOR: BLANK = NATURAL COLOR
AM=AMBER BK=BLACK BU=BLUE
BN=BROWN GY=GRAY GN=GREEN
OR=ORANGE RD=RED YW=YELLOW
COLORS AVAILABLE ONLY IN 94V-2 MATERIAL

MATERIAL: BLANK=NYLON TYPE 6/6, 94V-2
201=NYLON TYPE 6/6, 94V-0

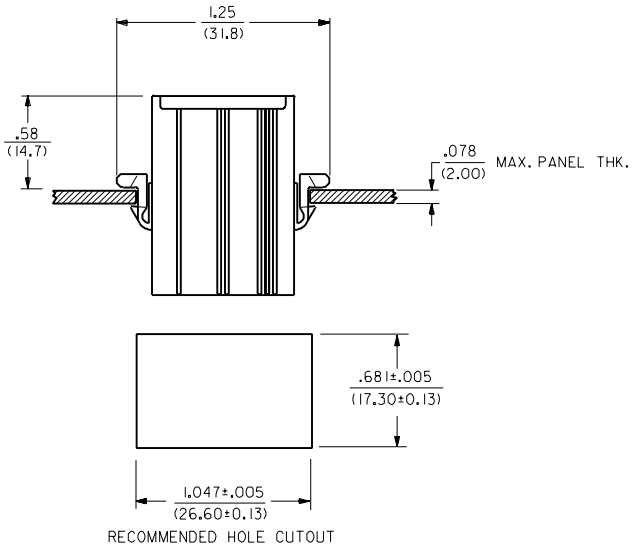

MOUNTING
HOLE DETAIL

LTR.	REVISIONS	LTR.	REVISIONS
		M	SEE SHEET 1
		L	SEE SHT. 1
		K	SEE SHT. 1
		J	SEE SHT. 1

DIMENSIONS SHOWN (METRIC) INCH
UNLESS OTHERWISE SPECIFIED TOLERANCES: ANGULAR ± 0°

	INCH	METRIC
3 PLACE	± .010	---
2 PLACE	± .014	± 0.25
1 PLACE	---	± 0.36

DRAFT WHERE APPLICABLE MUST REMAIN WITHIN DIMENSIONS

DRWG. BY JJS CHK'D. BY RW
APP'D. BY RAS SCALE --:--

REVISE ONLY ON CAD SYSTEM

TITLE .093/(2.36) HOUSINGS
PLUG AND RECEPTACLE
6 CKT., .264/(6.70) CTRS.

MOLEX INCORPORATED
LISLE, ILL. 60532 U.S.A.

SHEET NO. 3 DATE 1/22/88

PART NO. SEE CHART DRWG. NO. SD-3191-6•

FILE NAME S3191GX3 DGN

THIS DRAWING CONTAINS INFORMATION THAT IS PROPRIETARY TO MOLEX INC. AND SHOULD NOT BE USED WITHOUT WRITTEN PERMISSION.

DIV. CP SIZE C