THIS DRAWING IS UNPUBLISHED. RELEASED FOR PUBLICATION ,19 .
© COPYRIGHT 19 BY AMP INCORPORATED. ALL RIGHTS RESERVED.

LOC	DIST
FT	0

REVISIONS

P	LTR	DESCRIPTION	DATE	DWN	APVD
	H	REVISE PER ECN 0G3B-0124-00	26APR00	SU	GS
	H1	REVISED PER ECO-10-000443	13JAN10	KK	AEG

1. MATES WITH MATE-N-LOK II PLUG CONNECTOR USING PART NUMBER 193797-1 OR 193842-1 SOCKET CONTACTS.
2. ALL DIMENSIONS ARE REFERENCE ONLY EXCEPT P.C. LAYOUT.
3. OBSOLETE PARTS: OBSOLETE CIS STREAMLINING PER D.RENAUD/D.SINISI

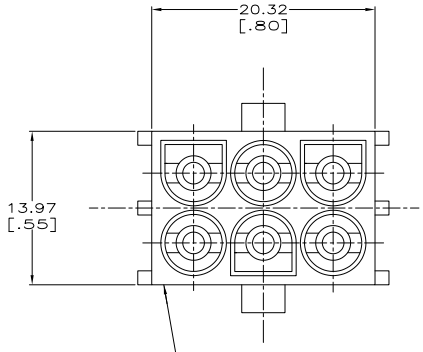

HOUSING
MATERIAL: NYLON 94V-0

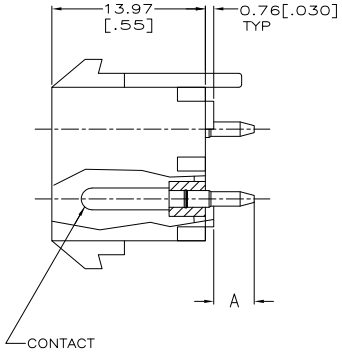

CONTACT
MATERIAL: COPPER ALLOY
FINISH: 5μm [200μmIN] MIN SILVER OVER 1μm [40μmIN] MIN NICKEL

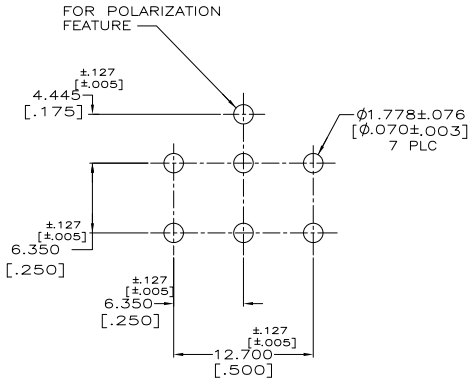

RECOMMENDED LAYOUT FOR P.C. BOARD

3 OBSOLETE	TUBE	1.57[.062]	3.68[.145]	~~194002-3~~
	BULK	3.17[.125]	5.20[.205]	194002-2
	BULK	1.57[.062]	3.68[.145]	194002-1
	PACKAGING	PC BOARD THICKNESS	A	PART NUMBER

THIS DRAWING IS A CONTROLLED DOCUMENT FOR AMP INCORPORATED. IT IS SUBJECT TO CHANGE AND THE CONTROLLING ENGINEERING ORGANIZATION SHOULD BE CONTACTED FOR THE LATEST REVISION.

DIMENSIONS: mm [in]

TOLERANCES UNLESS OTHERWISE SPECIFIED:
0 PLC ±-
1 PLC ±-
2 PLC ±-
3 PLC ±-
4 PLC ±-
ANGLES ±-

MATERIAL -
FINISH -

DWN C. M. SVOBODA 06/SEP/94
CHK 16/MAY/94
APVD 16/MAY/94
PRODUCT SPEC -
APPLICATION SPEC -
WEIGHT -

AMP
AMP Incorporated
Harrisburg, PA 17105-3608

NAME HIGH CURRENT VERT. PIN HEADER ASSY; MATE-N-LOK II, 6 CIRCUIT

SIZE A2 | CAGE CODE 00779 | DRAWING NO C-194002

CUSTOMER DRAWING

SCALE - | SHEET 1 OF 1 | REV H1

194002

AMP 1471-9 REV 10/93 Translated 061031.092717 (YYMMDD.HHMMSS) from Computervision, Inc., Medusa Revision 12.2.5T

26-APR-00 10:11:09 u7435

Downloaded from Elcodis.com electronic components distributor