THIS DRAWING IS UNPUBLISHED. RELEASED FOR PUBLICATION
© COPYRIGHT 2011 ALL RIGHTS RESERVED.

REVISIONS					
LTR	DESCRIPTION	DATE	DRN	APVD
D4	REVISED PER ECO-11-005150	30MAR2011	RK	HMR

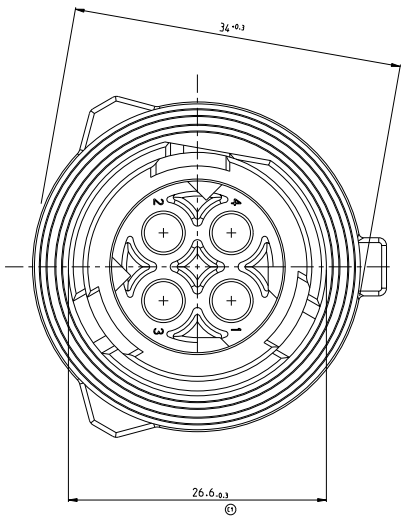

SECTION A-A
Schnitt

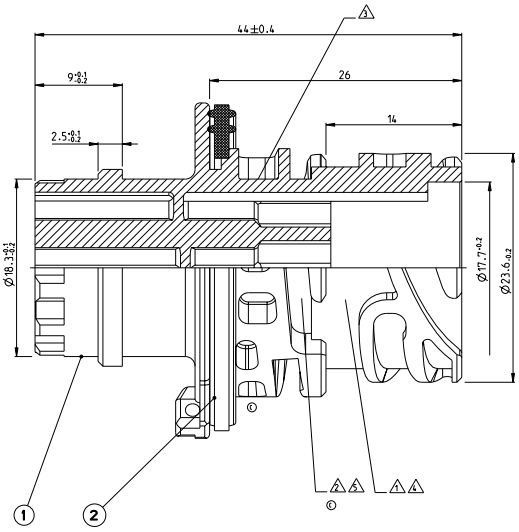

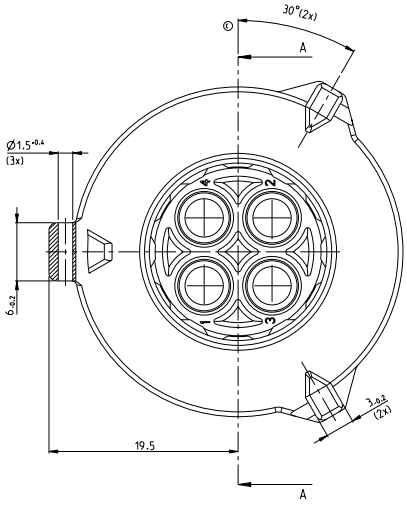

NOTES:
Bemerkungen:

03 1 AMP OR Tyco Electronics (TE) LOGO
AND TE CONNECTIVITY SINGLE PART-NUMBER
AMP oder Tyco Electronics (TE) Logo
und TE CONNECTIVITY Einzelteilnummer

2 MATERIAL MARKING
Werkstoffkennzeichnung

3 REVISION OF THE MOULD
Werkzeugaenderungsindex

4 PRODUCTION DATE
Produktionsdatum

5 CAVITY MARKING
Nestmarkierung

6 FOR SUITABLE CONTACTS AND SEALS SEE DRAWING:
Zu verwendende Kontakte und Einzeldichtungen
03 01 C1 siehe Tabellenzeichnung:

TE CONNECTIVITY 1355064

C MAX. WIRE THICKNESS: 2.5mm² FLR
max. Drahtgroesse: 2.5mm² FLR

7 PANEL MOUNTING WITH FIXING RING
TE CONNECTIVITY-NO. 965687-1
Hinterwandmontage mit Befestigungsring
TE CONNECTIVITY-Nr. 965687-1

C
8 COUPLING PART ACC. TO DIN 72585 / ISO 15170
Kupplungsseite nach DIN 72585 / ISO 15170

C1 9 IN THE CASE OF NEW DESIGNS, THE
DIMENSIONS OF THE CUT OFF SHOULD BE
PLACED NEAR THE LOWER TOLERANCE LIMIT
Hinterwandmontage mit Befestigungsring
Bei Neukonstruktionen sollten die Masse
des Bleichausschnittes an die untere
Toleranzgrenze gelegt werden

9 7 CUT OFF
(MATERIAL THICKNESS: 2.5 +0.1 MM)
E1 C Befestigungsausschnitt
(Materialstaerke: 2.5 +0.1 mm)

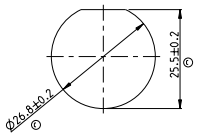

		02																					
		1, 2, 3, 4			1, 2, 3, 4	1, 2	1, 2, 3	1, 2, 3, 4	1, 2	1, 2, 3	1, 2, 3, 4	USED CONTACT CAVITIES Kontaktnestbelegung											
		D			D	D	D	D	D	D	D	REV.											
		4-967402-1			3-967402-1	2-967402-3	2-967402-2	2-967402-1	5-967402-3	5-967402-2	5-967402-1	ORDER NO. Bestell-Nr. 03											
		X			X	X	X	X	X	X	X	2	1	SILICONE	GREEN Gruen	6	SEALING Dichtung						
		X			-	-	-	-	-	-	-	1	1	PBT-GF20	BLUE Blau		4POS. PIN HOUSING 4pol.. Stiftgehaeuse	02					
		-			X	-	-	-	-	-	-	1	1	PBT-GF20	GREEN Gruen		4POS. PIN HOUSING 4pol. Stiftgehaeuse	02					
		-			-	X	-	-	-	-	-	1	1	PBT-GF20	GREY Grau		2POS. PIN HOUSING 2pol. Stiftgehaeuse						
		-			-	-	X	-	-	-	-	1	1	PBT-GF20	GREY Grau		3POS. PIN HOUSING 3pol. Stiftgehaeuse						
		-			-	-	-	X	-	-	-	1	1	PBT-GF20	GREY Grau		4POS. PIN HOUSING 4pol. Stiftgehaeuse						
		-			-	-	-	-	X	-	-	1	1	PBT-GF20	BLACK Schwarz		2POS. PIN HOUSING 2pol. Stiftgehaeuse						
		-			-	-	-	-	-	X	-	1	1	PBT-GF20	BLACK Schwarz		3POS. PIN HOUSING 3pol. Stiftgehaeuse						
		-			-	-	-	-	-	-	X	1	1	PBT-GF20	BLACK Schwarz		4POS. PIN HOUSING 4pol. Stiftgehaeuse						
01	CODING 4 (BLUE) Kodierung 4 (blau)		CODING 3 (GREEN) Kodierung 3 (gruen)		CODING 2 (GREY) Kodierung 2 (grau)			CODING 1 (BLACK) Kodierung 1 (schwarz)				POS.	QTY Stueck	MATERIAL	COLOUR Farbe		DESCRIPTION Beschreibung						
02																							

THIS DRAWING IS A CONTROLLED DOCUMENT.
DIMENSIONS: mm
MATERIAL: SEE TABLE
TOLERANCES UNLESS OTHERWISE SPECIFIED: ISO 16 TO GRADE
% ±0.2mm
X ±
XX ±
XXX ±
ANGLES ±0°
FINISH: SEE TABLE

DRN 06MAR1995 G. GRANZOW
CHK 06MAR1995 J. Hass
APPD 10MAY2010 Ch. Eberwein
PRODUCT SPEC 108-18621-0
APPLICATION SPEC 114-18235-0
WEIGHT 15g
CUSTOMER DRAWING

TE Connectivity

NAME 2.5MM PIN HOUSING, 2-4POS.. ASSY
2.5mm Stiftstecker, 2-4pol.. Assy
-

SIZE A1 CAGE CODE 00779 DRAWING NO C-967402
RESTRICTED TO -
SCALE 5:1 SHEET 1 OF 1 REV D4

4005 V3/111.1
Pro/ENGINEER DRAWING

Downloaded from Elcodis.com electronic components distributor