THIS DRAWING IS UNPUBLISHED. RELEASED FOR PUBLICATION ,19 .
© COPYRIGHT 19 BY AMP INCORPORATED. ALL RIGHTS RESERVED.

LOC	DIST
FT	8

REVISIONS

P	LTR	DESCRIPTION	DATE	DWN	APVD
	G	REDRAWN W/O CHANGE EC 0020-291-96	15 APR 97	–	–

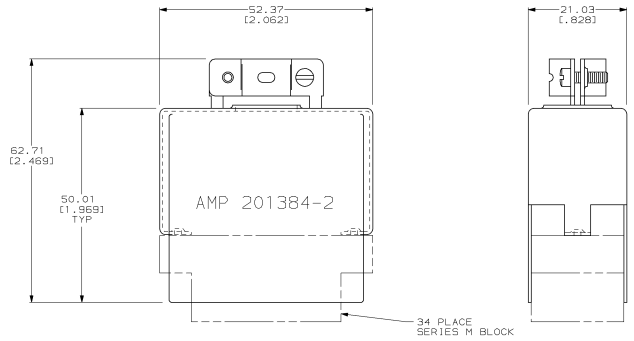

ASSEMBLED VIEW

1. CABLE CLAMP WILL ACCEPT 34 WIRES OF 1.78 [.070] MAX DIA.

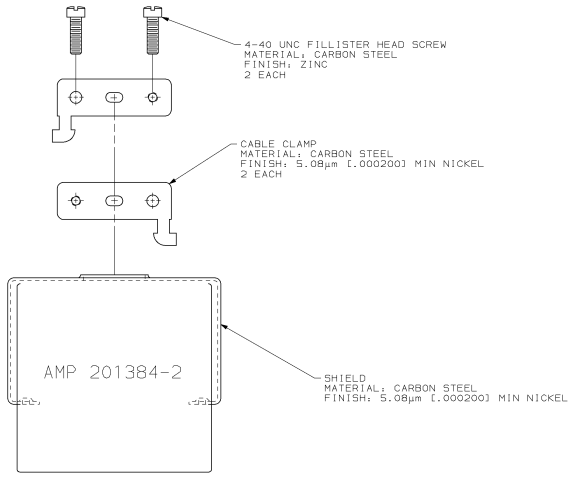

201384-2

PART NUMBER

THIS DRAWING IS A CONTROLLED DOCUMENT.

DIMENSIONS, mm [INCHES]

TOLERANCES UNLESS OTHERWISE SPECIFIED:
0 PLC ±–
1 PLC ±0.
2 PLC ±0.41 [.016]
3 PLC ±–
4 PLC ±–
ANGLES ±–

MATERIAL –
FINISH –

DWN C.OBERMAN 15 APR 97
CHK R.STONE 08 AUG 96
APVD R.STEINHAUER 21 JAN 97
PRODUCT SPEC –
APPLICATION SPEC –
WEIGHT –

CUSTOMER DRAWING

AMP Incorporated
Harrisburg, PA 17105-3608

NAME SHIELD KIT, UNASSEMBLED, 34 POSITION, M SERIES

SIZE A1 CAGE CODE 00779 DRAWING NO C-201384

RESTRICTED TO –

SCALE 2:1 SHEET 1 OF 1 REV G

AMP 406G REV 27JUN96

15-APR-97 08:33:06 amp0850 /home/nsrv436d/dsk54/dept423/amp0850/edmond

Downloaded from Elcodis.com electronic components distributor