THIS DRAWING IS UNPUBLISHED. RELEASED FOR PUBLICATION -,N/A .
© COPYRIGHT N/A By - ALL RIGHTS RESERVED.

| LOC | DIST |
|---|---|
| — | — |

REVISIONS

| P | LTR | DESCRIPTION | DATE | DWN | APVD |
|---|---|---|---|---|---|
| | U | REVISED PER ECO-15-016062 | 09NOV15 | KG | CD |

1. THIS RCPT. IS DESIGNED TO CONFORM TO THE LATEST ISSUE OF MIL-C-24308.
2. MAX WIRE INSUL TO BE USED WITH THIS RCPT IS .054 DIA.
3. METAL RETENTION CLIPS ARE INCLUDED IN INSERTS.
4. THIS RCPT. WILL ACCEPT SIZE 22 SOCKET CONTACT M39029/57-354 OR ANY TYCO HDD-22 SOCKET CONTACT. CONTACTS ORDERED SEPARATELY.

5. MFG'S PART NO. MARKED ON CONNECTOR REPRESENTS KIT NUMBER WITH CONTACTS.

6. UL/CSA DESIGNATION STAMPED IN THIS AREA, OPTIONAL.

7. FINISH: CADMIUM PER QQ-P-416.

8. FINISH: BRIGHT TIN PER ASTM-B-545 .000400-.000550 THK OVER COPPER PER AMS2418 .000050 MIN THK.

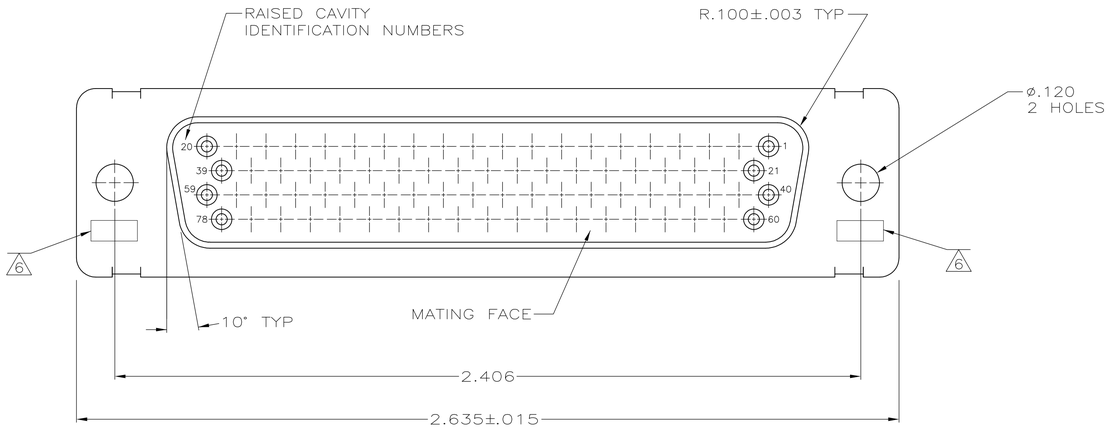


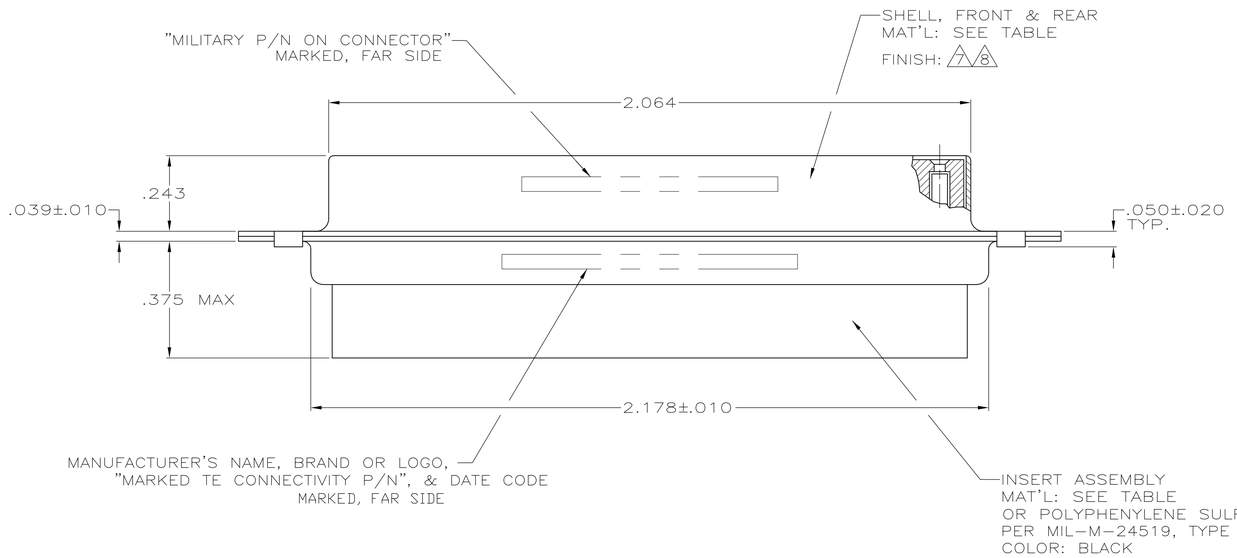


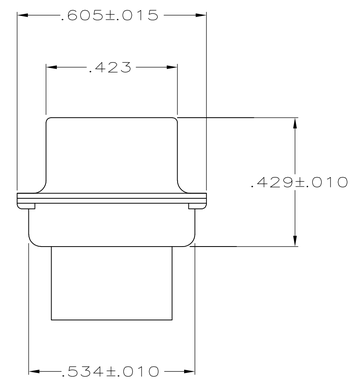


| | MILITARY P/N ON PACKAGE | MILITARY P/N ON CONNECTOR | MFG'S P/N ON CONNECTOR | REMARKS | SHELL FINISH | SHELL MAT'L | INSERT MAT'L | PART NO. |
|---|---|---|---|---|---|---|---|---|
| | - | - | 204508-5 | - | 8 | STEEL, CLASS G | POLYPHENYLENE SULFIDE(PPS) PER MIL-M-24519, TYPE GST-40F COLOR: BLACK | 204508-5 |
| SUPSD BY 204508-1 | - | - | - | - | - | STEEL, CLASS G | PHENOLIC COLOR: BLACK | 204508-3 |
| SUPSD BY 206505-4 | - | - | - | - | - | BRASS | DIALLYL PATHALATE COLOR: BLUE | 204508-2 |
| | M24308/2-290F | M24308/2-15F | 204520-2 | 5 | 7 | STEEL, CLASS G | POLYPHENYLENE SULFIDE(PPS) PER MIL-M-24519, TYPE GST-40F COLOR: BLACK | 204508-1 |

THIS DRAWING IS A CONTROLLED DOCUMENT.

DIMENSIONS: INCHES

TOLERANCES UNLESS OTHERWISE SPECIFIED:
0 PLC ± -
1 PLC ± -
2 PLC ± -
3 PLC ± .005
4 PLC ± -
ANGLES ± 0°30'

MATERIAL: SEE TABLE
FINISH: SEE CALLOUTS

DWN C.C.THOMAS 01-DEC-87
CHK F.C.BALLEW 25-JAN-88
APVD F.C.BALLEW 25-JAN-88
PRODUCT SPEC —
APPLICATION SPEC —
WEIGHT —

TE Connectivity

NAME: AMPLIMITE RCPT FOR SOCKET CONTACTS HI-DENSITY D CONNECTOR SIZE 5 (78 POSN) SERIES 90

| SIZE | CAGE CODE | DRAWING NO | RESTRICTED TO |
|---|---|---|---|
| A1 | 00779 | C-204508 | — |

CUSTOMER DRAWING | SCALE 4:1 | SHEET 1 OF 1 | REV U

4805 (3/11)

# Mouser Electronics

Authorized Distributor

Click to View Pricing, Inventory, Delivery & Lifecycle Information:

TE Connectivity:

204508-1