THIS DRAWING IS UNPUBLISHED. RELEASED FOR PUBLICATION 20
© COPYRIGHT 20 BY - ALL RIGHTS RESERVED.

LOC	DIST
-	-

REVISIONS

P	LTR	DESCRIPTION	DATE	DWN	APVD
	A	REVISED PER ECR-16-018289	30DEC2016	RK	PO

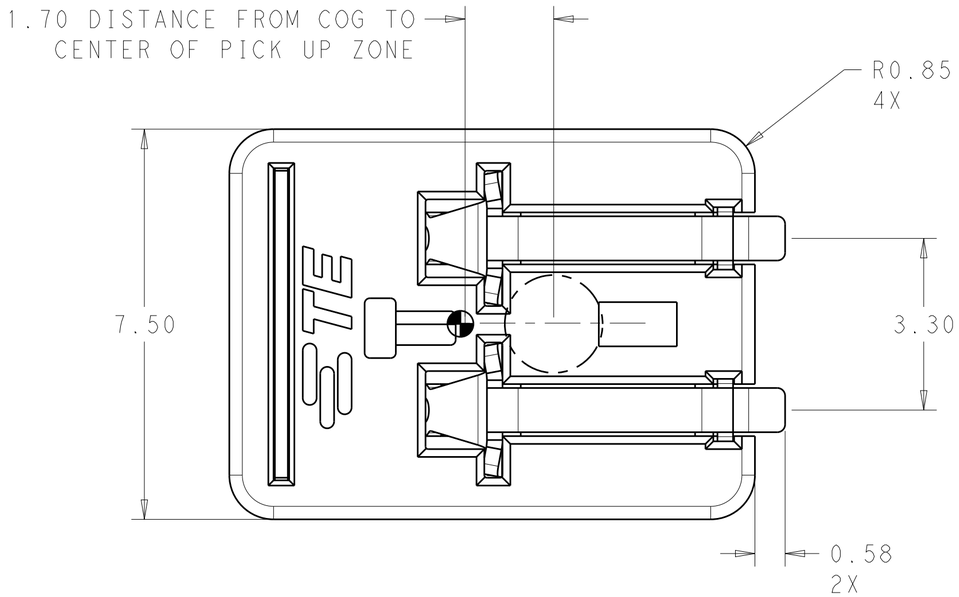

1. MATERIALS AND FINISH:
   - -HOUSING AND COVER: THERMOPLASTIC, COLOR: NATURAL
   - -CONTACTS: COPPER ALLOY, FINISH: Sn OVER Ni
   - -HOLD DOWN: COPPER ALLOY, FINISH: Sn OVER Ni
2. MUST COMPLY WITH DIRECTIVE 2002/95/EC (ROHS)
3. THIS PRODUCT HAS NOT COMPLETED VALIDATION TESTING.
4. PACKAGED IN TAPE AND REEL
5. PCB EDGE TO BE DETERMINED BY CUSTOMER APPLICATION
6. TO BE USED WITH 1.0±10% (OR 0.8±10%) PCB THICKNESS
7. TO BE USED WITH 1.6±10% PCB THICKNESS
8. DIMENSION SHOWN IS RECOMMENDED SOLDER MASK OPENING

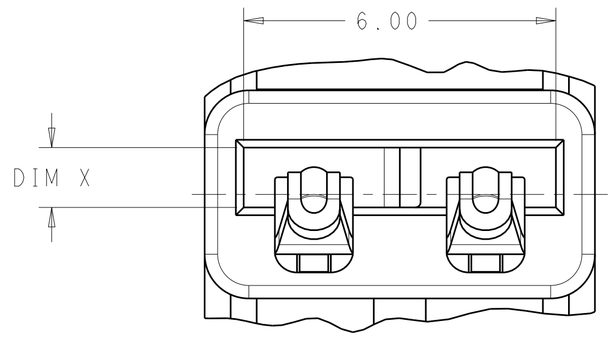

VIEW E
SCALE 12:1

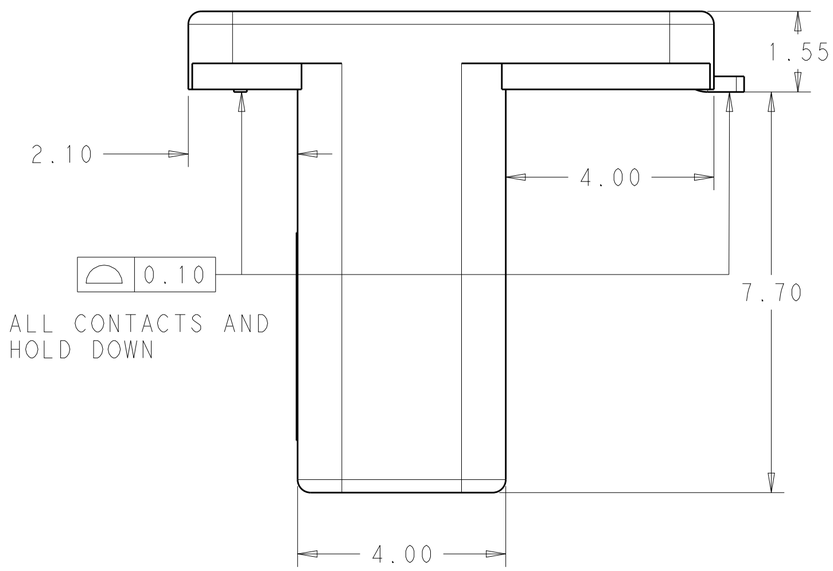

SEE VIEW E

2213188-1,-2

MARKING	COVER	DIM B	DIM X	PART NO.
1.6	WITH COVER	1.44 - 1.75	1.81	2213188-4
1.0	WITH COVER	0.72 - 1.10	1.15	2213188-3
1.6	W/O COVER	1.44 - 1.75	1.81	2213188-2
1.0	W/O COVER	0.72 -1.10	1.15	2213188-1

THIS DRAWING IS A CONTROLLED DOCUMENT.

DIMENSIONS: mm

TOLERANCES UNLESS OTHERWISE SPECIFIED:
0 PLC ±-
1 PLC ±0.2
2 PLC ±0.15
3 PLC ±-
4 PLC ±-
ANGLES ±2°

MATERIAL -
FINISH -

DWN C.DAILY 25OCT2012
CHK C.GINGRICH 25OCT2012
APVD -
PRODUCT SPEC 108-32041
APPLICATION SPEC 114-32054
WEIGHT -

TE Connectivity

NAME ASSEMBLY, CARD EDGE INVERTED THROUGH BOARD -

SIZE A2 | CAGE CODE 00779 | DRAWING NO C-2213188 | RESTRICTED TO -

CUSTOMER DRAWING | SCALE 7:1 | SHEET 1 OF 4 | REV A

THIS DRAWING IS UNPUBLISHED. RELEASED FOR PUBLICATION 20
© COPYRIGHT 20 BY - ALL RIGHTS RESERVED.

LOC	DIST
-	-

REVISIONS

P	LTR	DESCRIPTION	DATE	DWN	APVD
	-	SEE SHEET 1	-	-	-

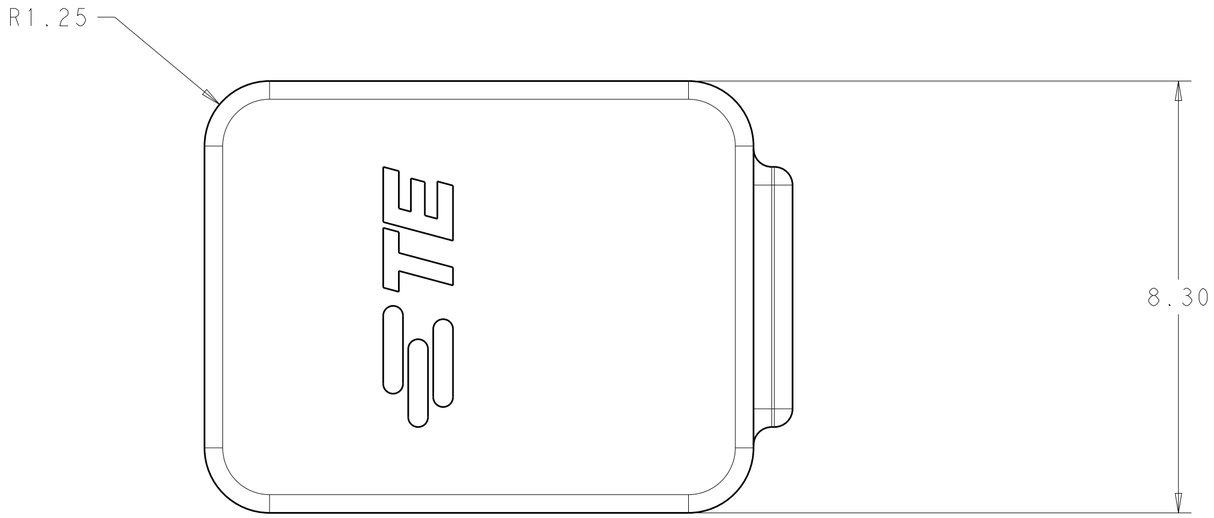

SCALE 12:1

2213188-3,-4

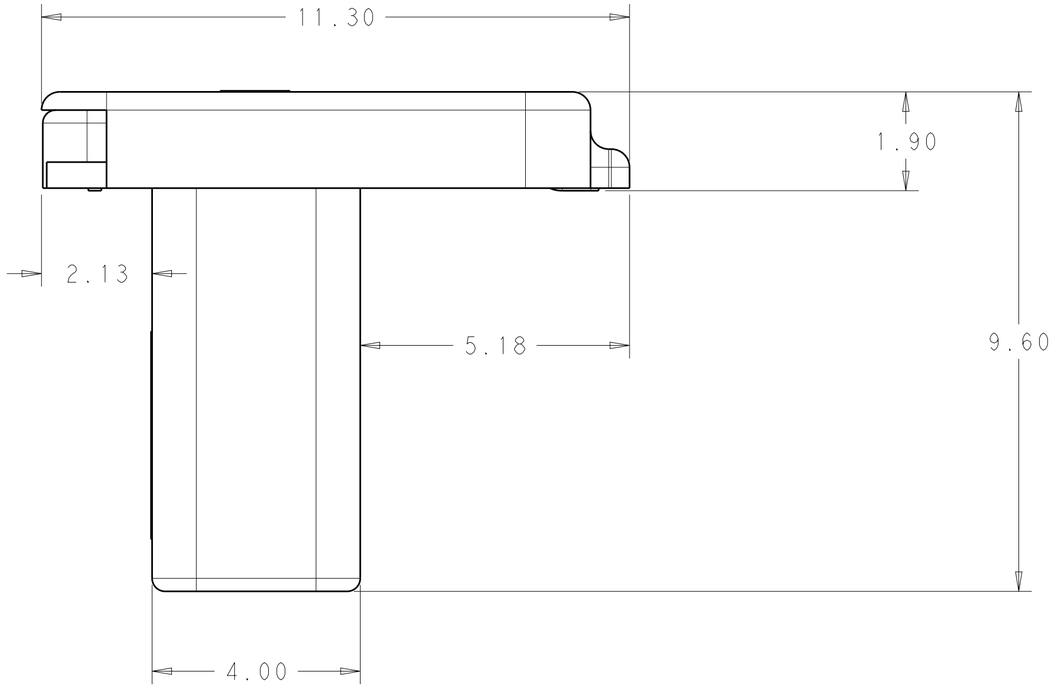

THIS DRAWING IS A CONTROLLED DOCUMENT.

DIMENSIONS: mm

TOLERANCES UNLESS OTHERWISE SPECIFIED:
0 PLC ±-
1 PLC ±0.2
2 PLC ±0.15
3 PLC ±-
4 PLC ±-
ANGLES ±2°

MATERIAL -
FINISH -

DWN C.DAILY 25OCT2012
CHK C.GINGRICH 25OCT2012
APVD -
PRODUCT SPEC 108-32041
APPLICATION SPEC 114-32054
WEIGHT -

TE Connectivity

NAME ASSEMBLY, CARD EDGE INVERTED THROUGH BOARD
-

SIZE	CAGE CODE	DRAWING NO	RESTRICTED TO
A2	00779	C-2213188	-

CUSTOMER DRAWING | SCALE 7:1 | SHEET 2 OF 4 | REV A

THIS DRAWING IS UNPUBLISHED. RELEASED FOR PUBLICATION 20
© COPYRIGHT 20 BY - ALL RIGHTS RESERVED.

LOC	DIST
-	-

REVISIONS

P	LTR	DESCRIPTION	DATE	DWN	APVD
	-	SEE SHEET 1	-	-	-

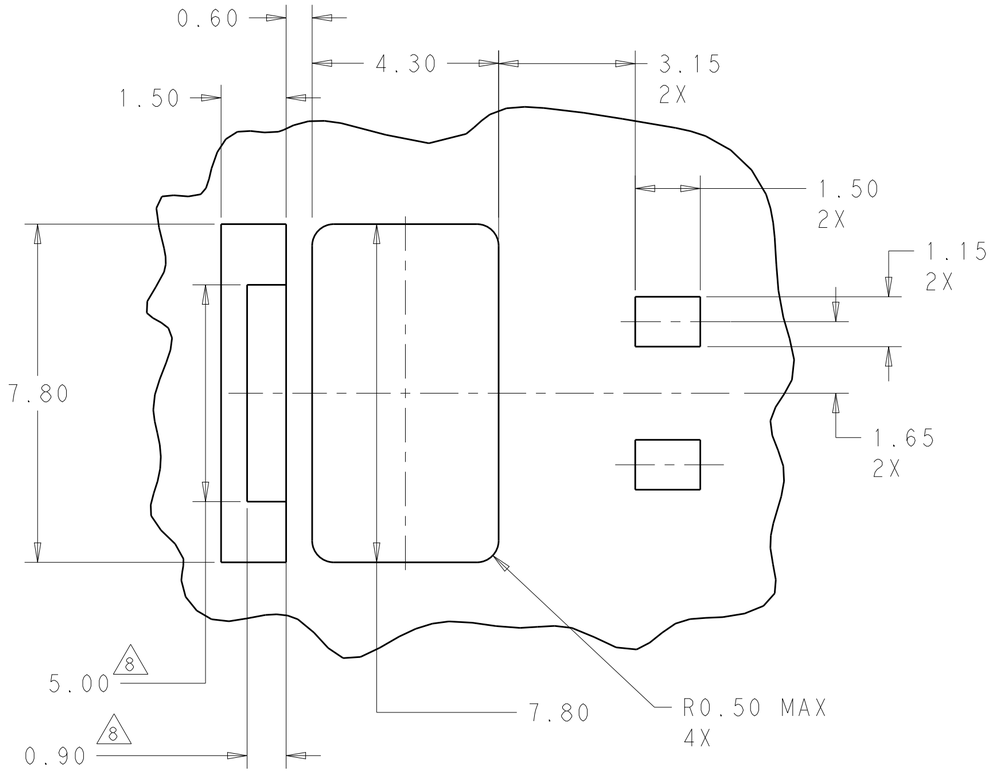

MOUNTING PCB LAYOUT
SCALE 10:1

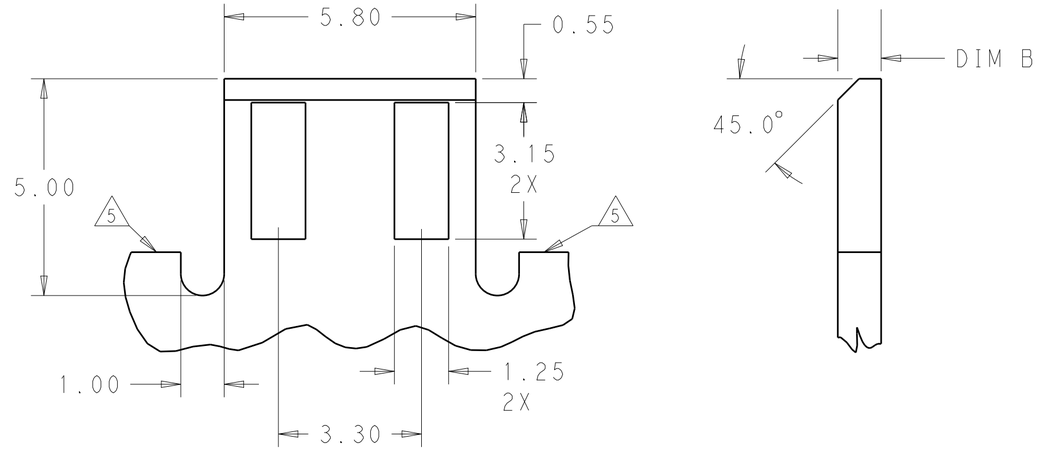

MATING PCB DETAILS (PREFERRED OPTION)
SCALE 10:1

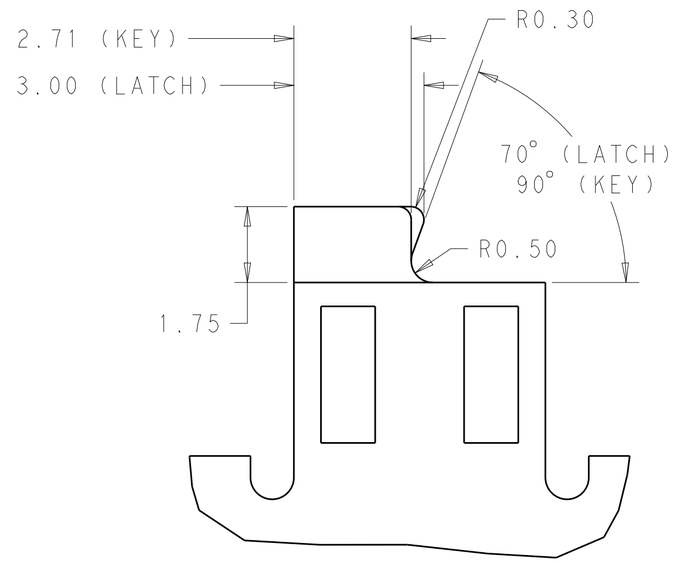

MATING PCB DETAILS (KEY AND LATCH OPTIONS)
SCALE 10:1

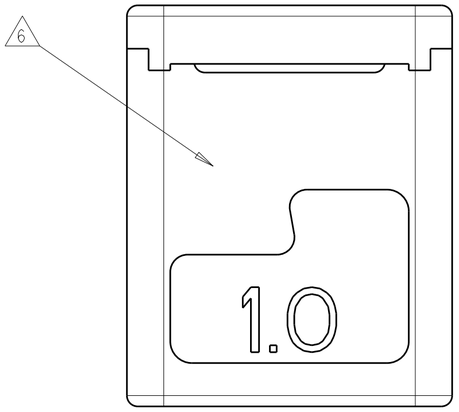

2213188-1, -3
SCALE 10:1

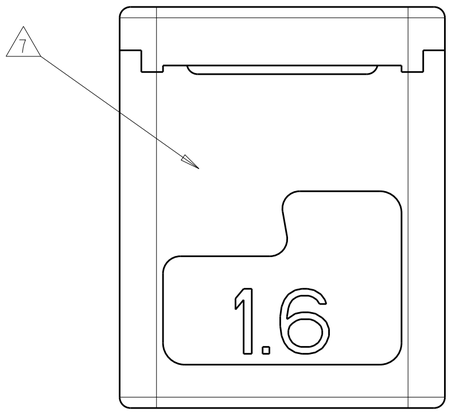

2213188-2, -4
SCALE 10:1

THIS DRAWING IS A CONTROLLED DOCUMENT.

DIMENSIONS: mm

TOLERANCES UNLESS OTHERWISE SPECIFIED:
0 PLC ±-
1 PLC ±0.2
2 PLC ±0.15
3 PLC ±-
4 PLC ±-
ANGLES ±2°

MATERIAL -
FINISH -

DWN C. DAILY 25OCT2012
CHK C. GINGRICH 25OCT2012
APVD -
PRODUCT SPEC 108-32041
APPLICATION SPEC 114-32054
WEIGHT -
CUSTOMER DRAWING

TE Connectivity

NAME ASSEMBLY, CARD EDGE INVERTED THROUGH BOARD
-

SIZE	CAGE CODE	DRAWING NO	RESTRICTED TO
A2	00779	C-2213188	-

SCALE 7:1 SHEET 3 OF 4 REV A

THIS DRAWING IS UNPUBLISHED. RELEASED FOR PUBLICATION 20
© COPYRIGHT 20 BY - ALL RIGHTS RESERVED.

LOC	DIST
-	-

REVISIONS

P	LTR	DESCRIPTION	DATE	DWN	APVD
	-	SEE SHEET 1	-	-	-

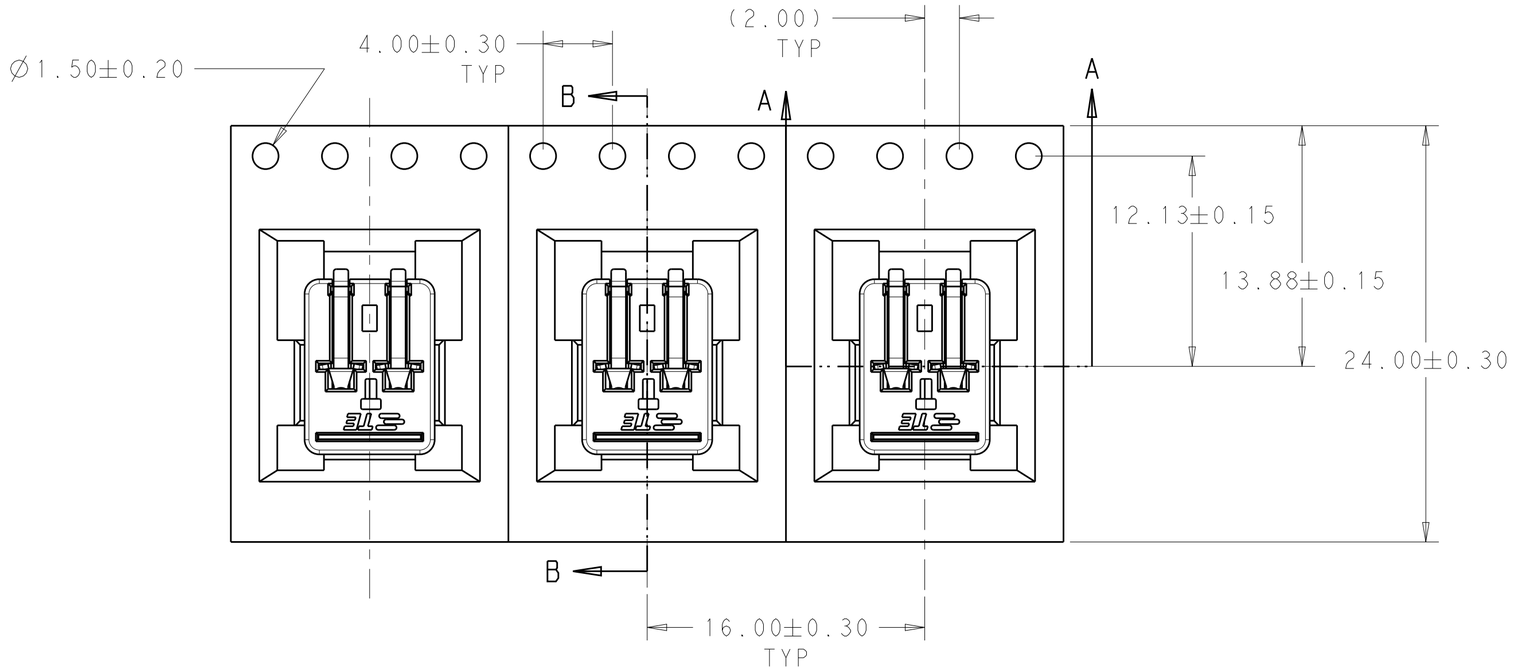

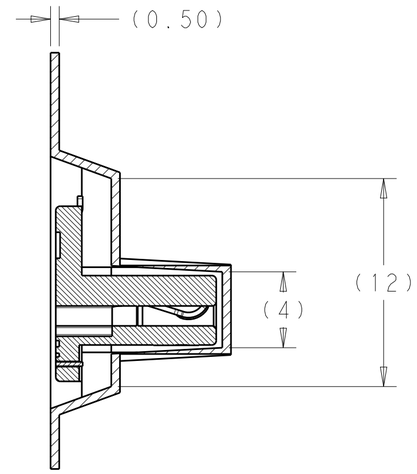

SECTION B-B

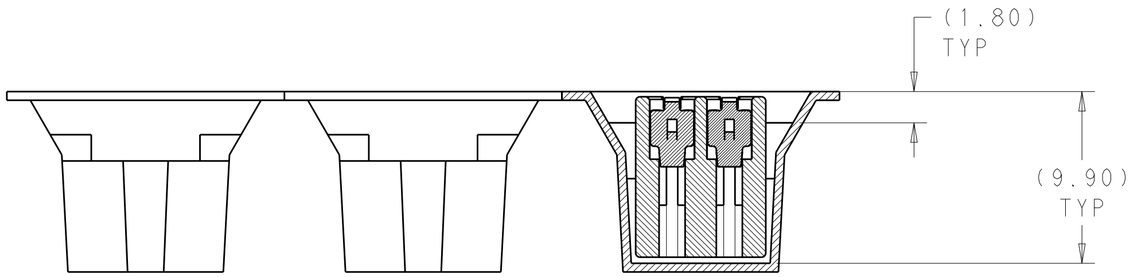

SECTION A-A

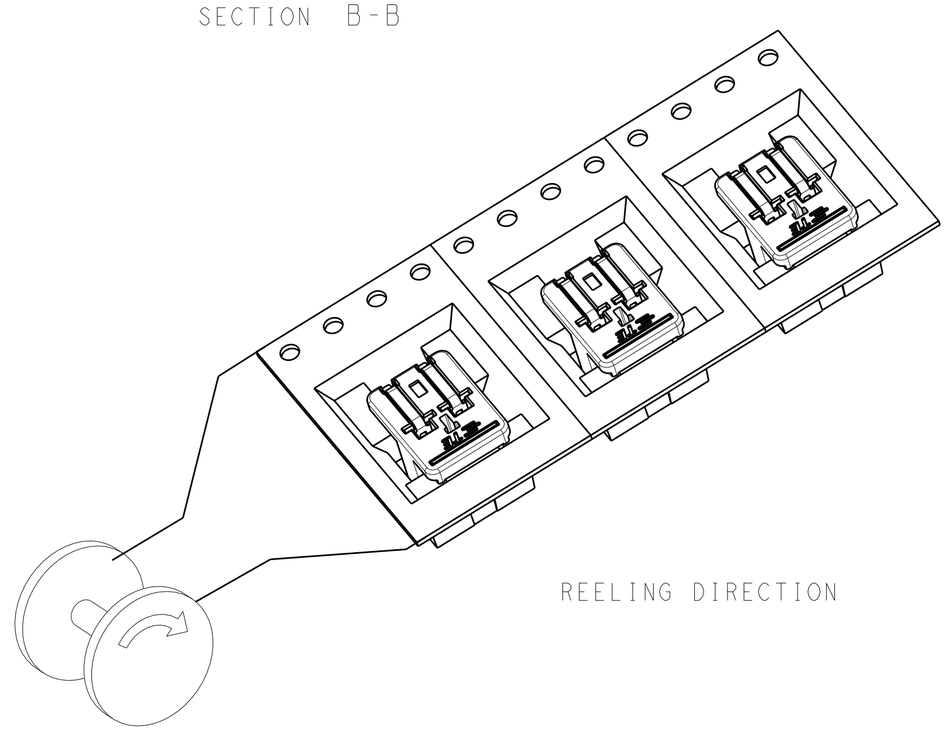

REELING DIRECTION

PACKAGING FOR 2213188-1 SHOWN

THIS DRAWING IS A CONTROLLED DOCUMENT.

DIMENSIONS: mm

TOLERANCES UNLESS OTHERWISE SPECIFIED:

0 PLC	±-
1 PLC	±0.2
2 PLC	±0.15
3 PLC	±-
4 PLC	±-
ANGLES	±2°

MATERIAL -

FINISH -

DWN C.DAILY 25OCT2012
CHK C.GINGRICH 25OCT2012
APVD -
PRODUCT SPEC 108-32041
APPLICATION SPEC 114-32054
WEIGHT -

TE Connectivity

NAME ASSEMBLY, CARD EDGE INVERTED THROUGH BOARD -

SIZE	CAGE CODE	DRAWING NO	RESTRICTED TO
A2	00779	C-2213188	-

CUSTOMER DRAWING | SCALE 7:1 | SHEET 4 OF 4 | REV A

Mouser Electronics

Authorized Distributor

Click to View Pricing, Inventory, Delivery & Lifecycle Information:

TE Connectivity:

2213188-4