Model 255

5/16” Panel Mount Non-relampable, Red/Green LED with 6” leads

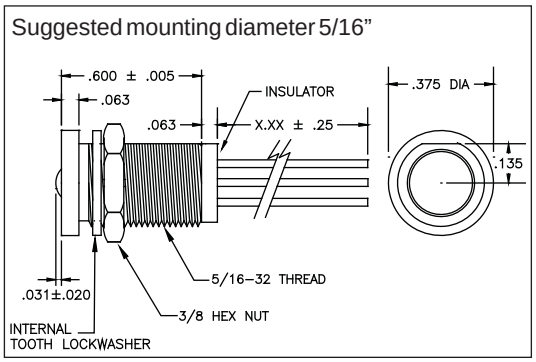

FEATURES

- 5/16” (0.312”) diameter mounting hole
- Black anodized aluminum body
- Available Voltages: 2V, 5V, 12V, 24V and 28V
- Hex nut, lock washer, insulator, and three 6” (standard) wire leads
- No lens for maximum viewing angle

SPECIFICATIONS

LED Size:	T 1 ¾” LED (5mm)
Lens Color:	White diffused
Raw Material:	GaAsP/GaP (Hi-efficiency red/ GaP green)
Forward Current:	30mA
Peak Forward Current:	160mA
Luminous Intensity:	Red: Minimum: 8 mcd, Typical: 20 mcd Green: Minimum: 5 mcd, Typical: 15 mcd
Viewing Angle:	60 degrees
Forward Voltage:	Min: 1.7V, Typical: 2.1V, Max: 2.8V
Wavelength:	Red = 635, Green = 565

HOW TO ORDER

Voltage	Model
2 VDC*	255-2-R/G
5 VDC	255-5-R/G
12 VDC	255-12-R/G
24 VDC	255-24-R/G
28 VDC	255-28-R/G

* External resistor required

Contact SloanLED if a different wire lead length or voltage is required

5725 Olivas Park Drive • Ventura, California 93003 • 805.676.3200 Fax 805.676.3206 • www.SloanLED.com • info@SloanLED.com

Downloaded from Elcodis.com electronic components distributor