UM2025
User manual

SPC570S-DISP: Discovery+ Evaluation Board

Introduction

This manual provides information for the final user application developer on how to use SPC57S-Discovery microcontroller evaluation board.

Contents

1 SPC570S-DISP 5

1.1 SPC57S-Discovery evaluation board 5

1.2 Debug interface 6

1.3 I/O interface and connectors 6

2 Hardware overview 7

2.1 Power Supply section 7

2.1.1 External Power Supply: 12VDC to 5VDC and 3.3VDC DC-DC converter 7

2.1.2 USB connection: 3.3 V 8

2.1.3 Automatic DC source selector 8

2.1.4 Test points 9

2.2 Crystal oscillator 10

2.3 Reset section 10

2.4 User LEDs 11

2.5 User buttons 11

2.6 ADC reference 12

2.7 Integrated USB programmer/debugger and JTAG port 12

2.8 High Speed CAN interface 15

2.9 LINFlex and UART 15

2.10 Arduino connectors 16

2.11 I/O header 17

3 Jumper configuration 21

Appendix A General handling precautions 22

Revision history 23

List of tables

Table 1. PSU section – LEDs description . . . 7
Table 2. PSU section – test points . . . 9
Table 3. User LEDs . . . 11
Table 4. User buttons . . . 11
Table 5. I/O header table (part 1) . . . 17
Table 6. I/O header table (part 2) . . . 19
Table 7. I/O header – 0R option . . . 20
Table 8. Jumpers configuration . . . 21
Table 9. Document revision history . . . 23

List of figures

Figure 1. SPC57S-Discovery board . . . 5
Figure 2. PSU section (PCB top side) . . . 7
Figure 3. PSU section Vout: 5.0 VDC . . . 8
Figure 4. PSU section Vout: 3.3 VDC . . . 8
Figure 5. USB connection - 3.3 VDC . . . 8
Figure 6. Automatic DC source selector – schematic diagram . . . 9
Figure 7. Automatic DC source selector - jumpers and test points . . . 9
Figure 8. Crystal oscillator . . . 10
Figure 9. Reset section . . . 10
Figure 10. User LEDs – Schematic diagram . . . 11
Figure 11. User buttons – Schematic diagram . . . 11
Figure 12. ADC reference . . . 12
Figure 13. Integrated Programmer/debugger – USB section . . . 13
Figure 14. Integrated Programmer/debugger – EEPROM . . . 13
Figure 15. Integrated debugger - Level Shifters . . . 14
Figure 16. Integrated debugger - LEDs . . . 14
Figure 17. JTAG Port - connector . . . 14
Figure 18. JTAG and Internal programmer – jumper options . . . 15
Figure 19. CAN section . . . 15
Figure 20. LIN . . . 16
Figure 21. LIN – Jumper configuration . . . 16
Figure 22. Arduino-Uno compatible Connectors - part 1 . . . 16
Figure 23. Arduino-Uno compatible Connectors – part 2 . . . 17
Figure 24. I/O header (schematic) . . . 17

1 SPC570S-DISP

1.1 SPC57S-Discovery evaluation board

The discovery board is based on the microcontroller SPC570S50E1, a high performance e200z0h dual core 32-bit Power Architecture® technology CPU, 512 Kbyte flash in an eTQFP64 package.

The several interfaces including GPI/O's, peripherals such as DSPI, LINFlexD (LIN and UART), FlexCAN and JTAG make the SPC570S-DISP an excellent starter kit for the customer to quickly evaluate the microcontroller as well as develop and debug application.

An integrated programmer debugger allows the debugging and programming the microcontroller. The same section allows to enable a USB to serial communication channel (USB Virtual COM port).

Dedicated connectors allow plugging shields Arduino-Uno compatible.

Figure 1. SPC57S-Discovery board

The content of hardware of SPC570S-DISP evaluation kit consists of:

- SPC570S-DISP discovery board (*Figure 1*).
- USB type A to mini-B cable.

The SPC57S Line is designed to address all Automotive applications as well as industrial safety oriented applications.

The SPC57S Line features specific functions to make automotive applications with integrity level up to ASIL-D of ISO 26262.

Free ready-to-run application firmware examples are available inside SPC5Studio web to support quick evaluation and development.

The PCB, the components and all HW parts assembled in this board meet requirements of the applicable RoHS directives.

1.2 Debug interface

- 1 x 14-pin JTAG interface
- USB integrated programmer debugger.

1.3 I/O interface and connectors

- PSU plug (+12V) (PSU not included)
- JTAG (Header 2x7 pin)
- FlexCAN (Header 2x4 pin)
- LINFlexD (Header 2x4 pin)
- 4 x 37, 0.1” pin array

2 Hardware overview

2.1 Power Supply section

Figure 2. PSU section (PCB top side)

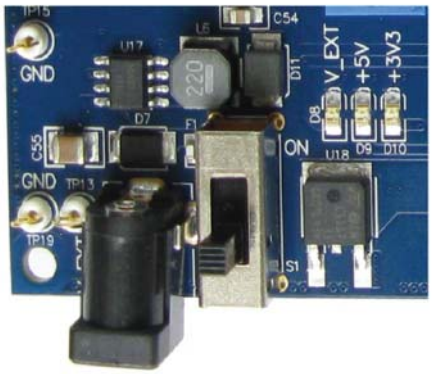

Table 1. PSU section – LEDs description

Item	Color	Function
D8	Green	Vext (+12V)
D9	Green	5V
D10	Green	3.3V

2.1.1 External Power Supply: $12V_{DC}$ to $5V_{DC}$ and $3.3V_{DC}$ DC-DC converter

This section is used only when an external 12 V PSU is connected to the X2, the external DC port[(a)].The diode D7 is used to protect the board against reverse polarity and AC source. The fuse F1 protects the board when an accidental short circuit occurs.

The LED D8 is turned on when the board is correctly powered and the switch S1 is set to ON position.

The 5 V supply section is based on the ST device A7985A. The linear regulator LD1117-3V3 generates the 3.3 V supply voltage.

Figure 3 and *Figure 4* show the schematic diagrams.

a. The external 12 V PSU adapter is not included in the evaluation kit. Plug information: the outside diameter is 5.5 mm, the inner diameter is 2.1 mm.

Figure 3. PSU section Vout: 5.0 V_{DC}

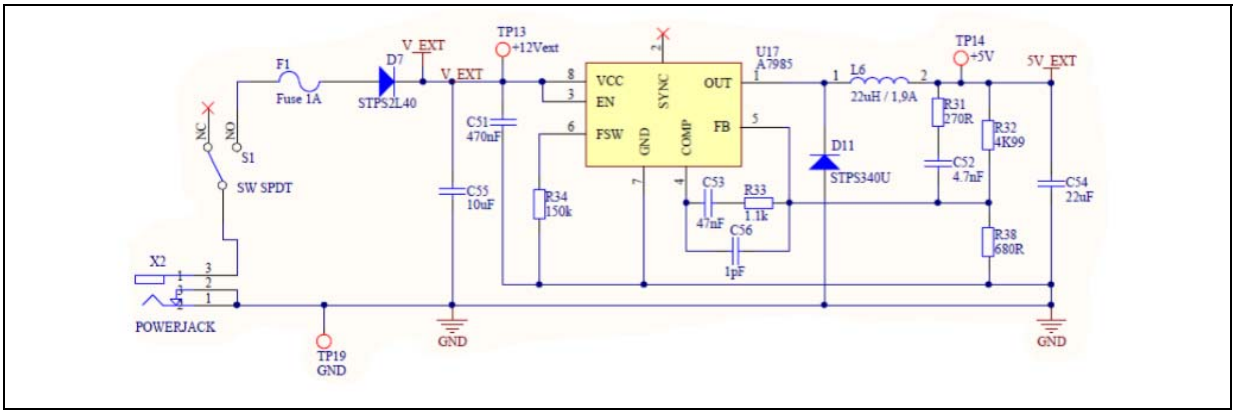

Figure 4. PSU section Vout: 3.3 V_{DC}

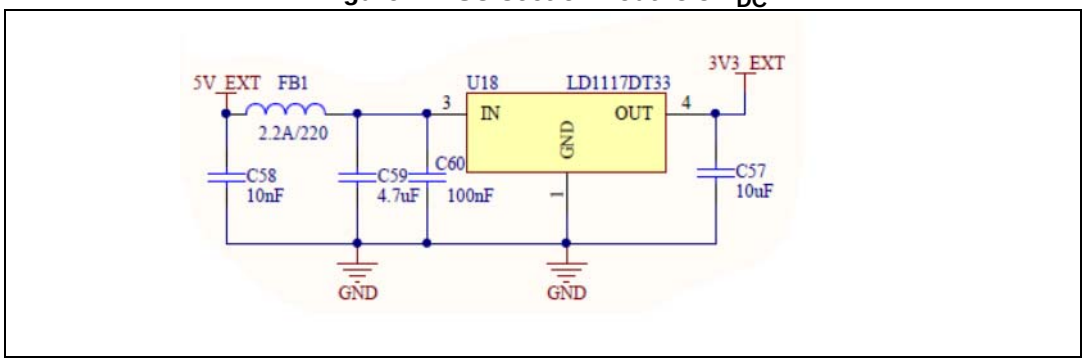

2.1.2 USB connection: 3.3 V

If the integrated programmer/debugger is used, 5 V supply comes from the USB cable; a dedicated linear regulator is used to generate 3.3 V, (*Figure 5*).

Figure 5. USB connection - 3.3 V_{DC}

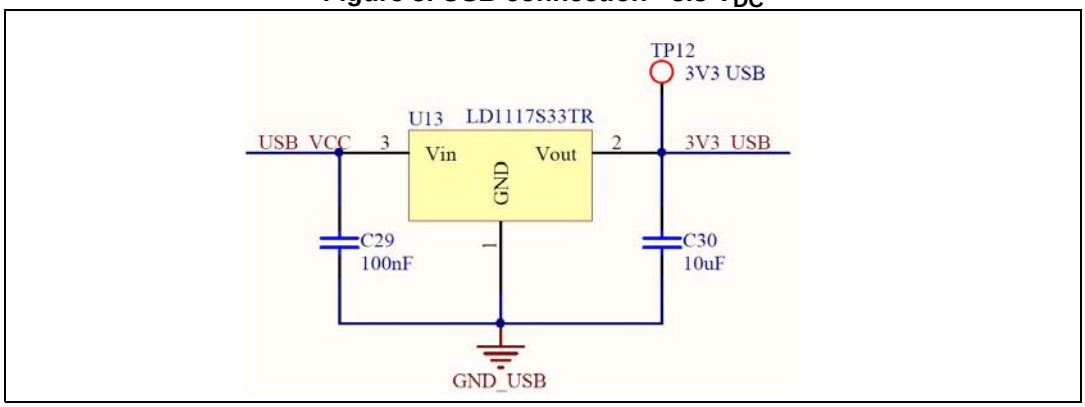

2.1.3 Automatic DC source selector

U19 and U20 select automatically 5 V or 3.3 V when the board is supplied by using the external PSU or the PC/USB cable. A voltage divider made by R46 and R51 is used to identify the source and it drives U19 and U23 properly.

Figure 6. Automatic DC source selector – schematic diagram

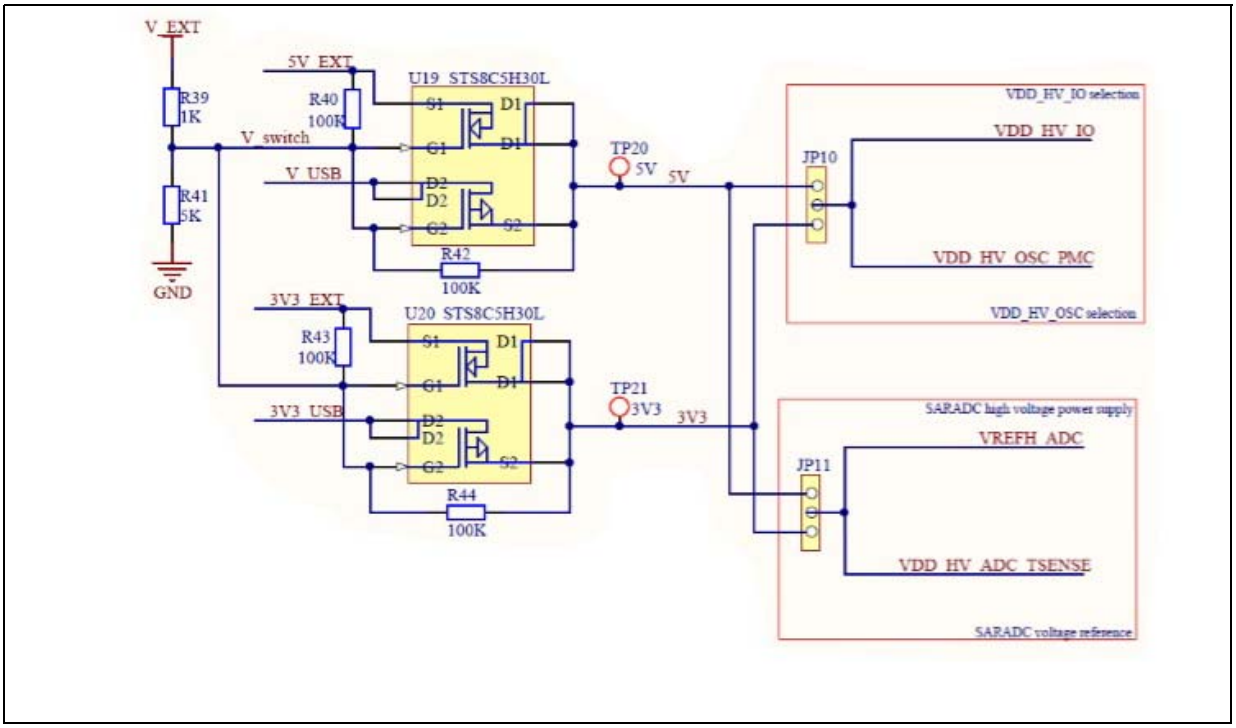

The jumper JP10 allows selecting the VDD_HV_IO level as well as JP11 sets the VDD_HV_ADCxx voltage level (3.3 V or 5 V).

Figure 7. Automatic DC source selector - jumpers and test points

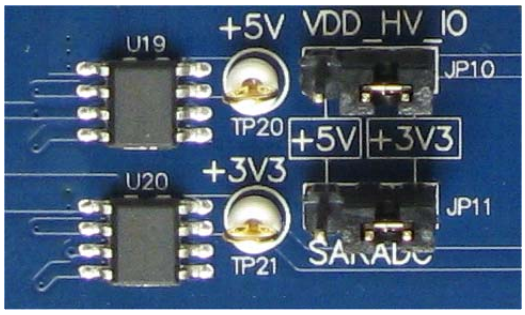

2.1.4 Test points

Some test points are present to monitor the supply voltage levels.

Table 2. PSU section – test points

Test point name	Signal/Voltage
TP13	V_Ext (+12V)
TP14	+5V_Ext
TP15	GND

Table 2. PSU section – test points (continued)

Test point name	Signal/Voltage
TP20	+5V
TP21	+3.3V

2.2 Crystal oscillator

The external oscillator pins are connected to 40 MHz crystal (Y1).

Figure 8. Crystal oscillator

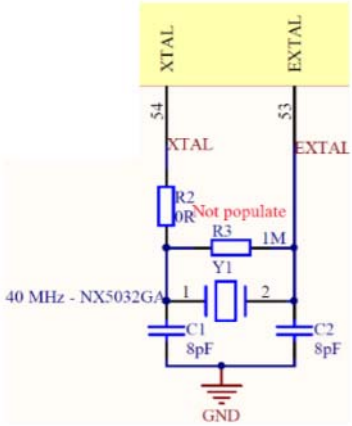

2.3 Reset section

The reset circuit (*Figure 9*) generates a sharp signal to reset the microcontroller. The push button S2 triggers the STM6315RB-2.63 V and it generates the reset pulse; D12 is turned on when the reset pulse is generated.

Figure 9. Reset section

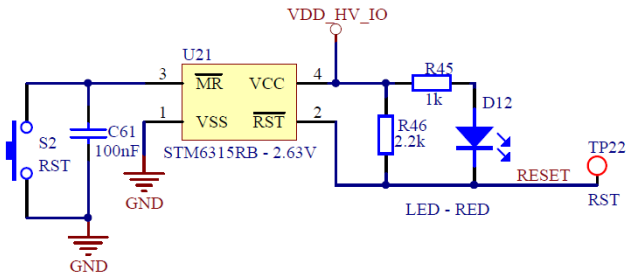

2.4 User LEDs

Three LEDs are available for user purposes and they are connected as shown in *Figure 10*. The jumpers JP14, JP16 and JP17 allow disconnecting the cathode of each LED's then let the user to reserve the GPIO pins for a different purpose.

Figure 10. User LEDs – Schematic diagram

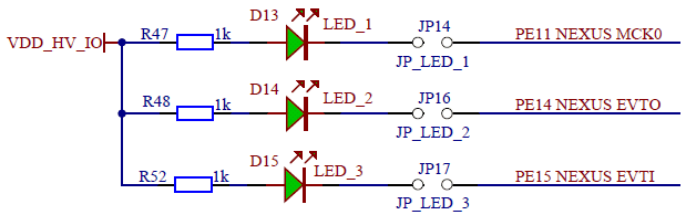

Table 3. User LEDs

LED	LED name	Color	µC Pin - Function
D13	LED_1	Green	PE11
D14	LED_2	Green	PE14
D15	LED_3	Green	PE15

2.5 User buttons

Three push buttons are available for user purpose (*Figure 11*). The jumpers JP12, JP13 and JP15 allow disconnecting the pull-down resistors and consequently using the GPIO signals for a different purpose.

Figure 11. User buttons – Schematic diagram

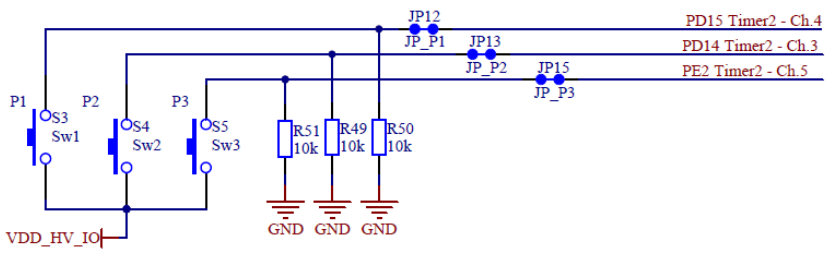

Table 4. User buttons

Push button	Push button name	µC Pin - Function
P1	SW_1	PD15
P2	SW_2	PD14
P3	SW_3	PE2

2.6 ADC reference

The ADC performance can be quickly evaluated by using the dedicated section reported in *Figure 12*. Removing the jumpers JP18 and JP19, the pins PB3 and PB4 can be mapped to support a different connection or function.

The maximum analog input voltage is VDD_HV_ADC_TSENSE; the level is adjustable by setting the jumper JP11 (see *Section 2.1.3: Automatic DC source selector*).

Figure 12. ADC reference

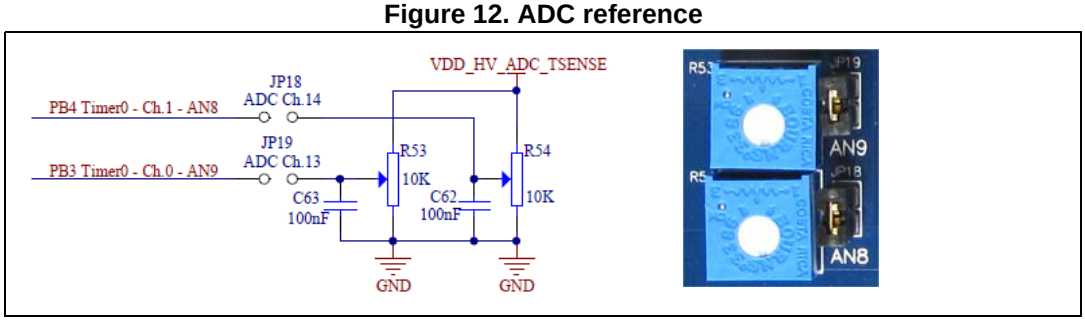

2.7 Integrated USB programmer/debugger and JTAG port

The integrated debugger allows the user or the application developer to program and debug the software applications. The integrated tool is based on the UDE PLS software and the device FTDI2232H.

The SPC570S-DISP discovery board includes a full-featured, perpetual code-limited PLS software license (256 Kbytes). The debugger serial number is reported on a label applied on the board.

The integrated debugger SW is accessible via ST's free integrated development environment, SPC5Studio. To download the debugger software and to activate license refer to the PLS website. Some jumper options allow to set the board to be programmed by using the integrated (default configuration) or external programmer.

The integrated programmer can be detached from the PCB and used as a standalone tool to program both different discovery boards and user application prototypes.

The board can be programmed also by using different HW tool by using the JTAG port.

Figure 13. Integrated Programmer/debugger – USB section

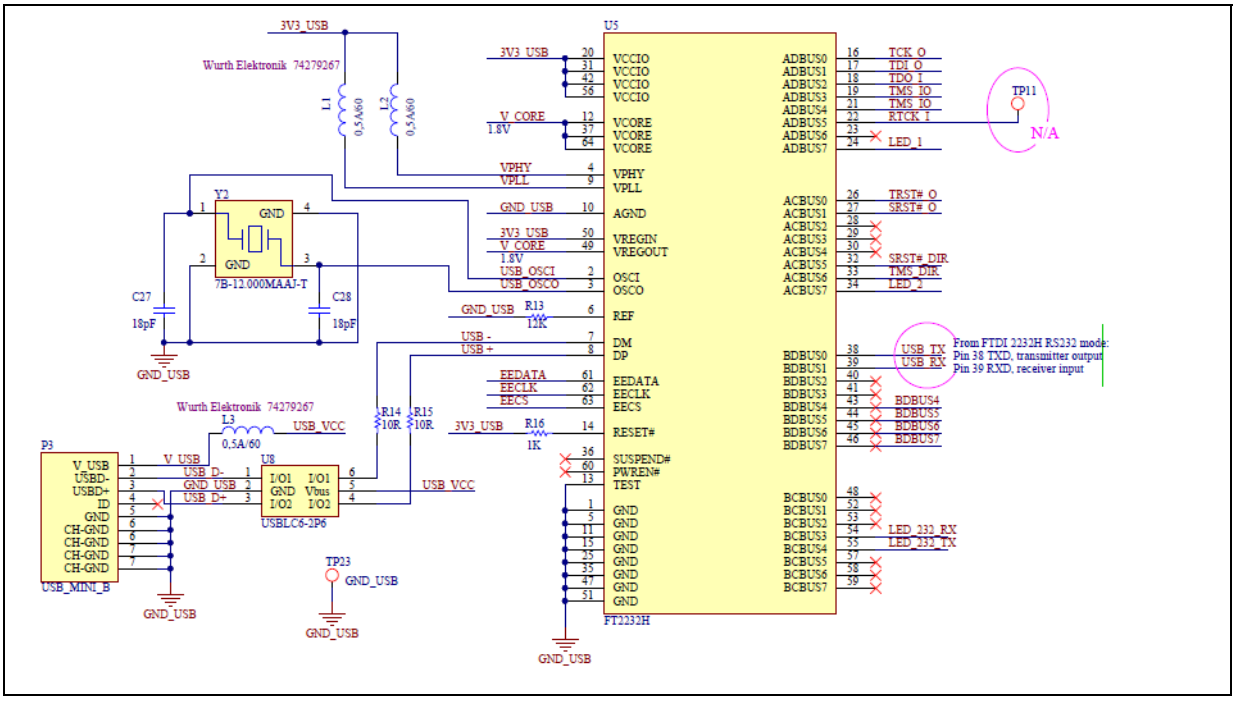

Figure 14. Integrated Programmer/debugger – EEPROM

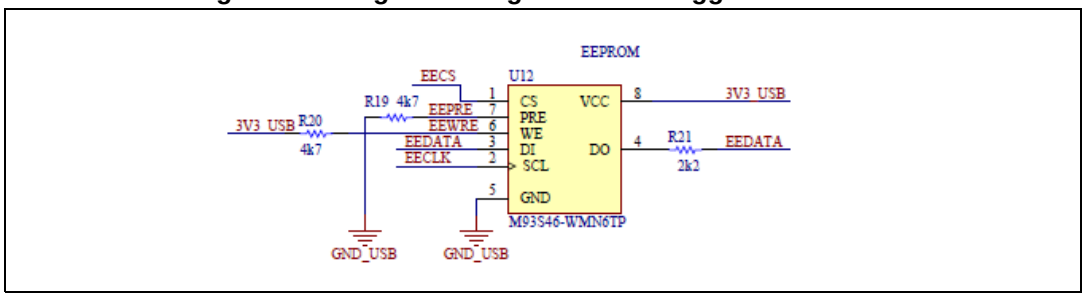

Figure 15. Integrated debugger - Level Shifters

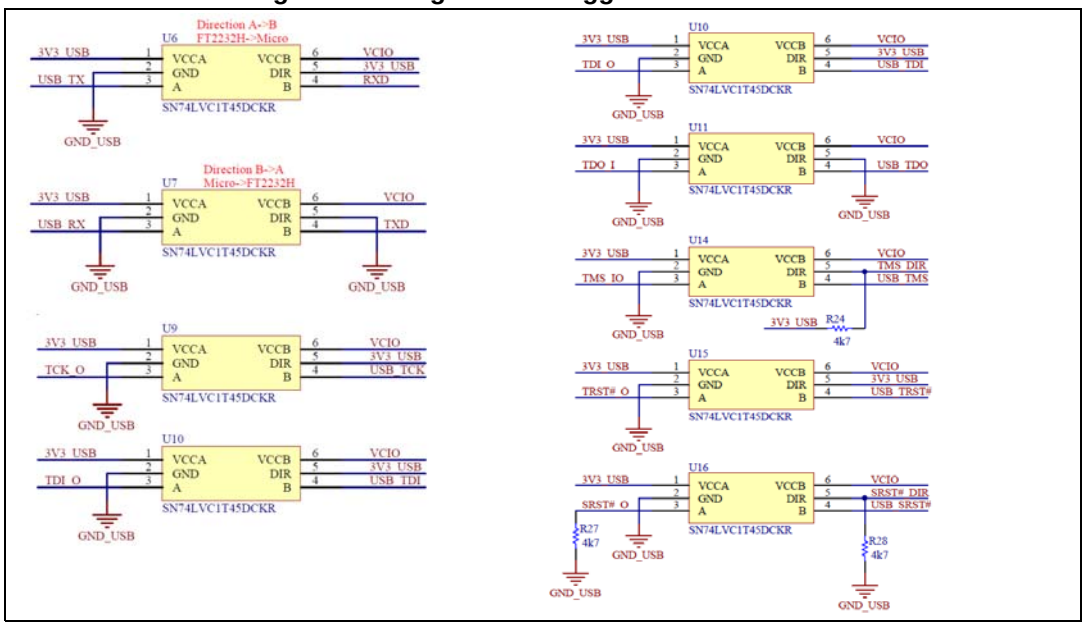

Figure 16. Integrated debugger - LEDs

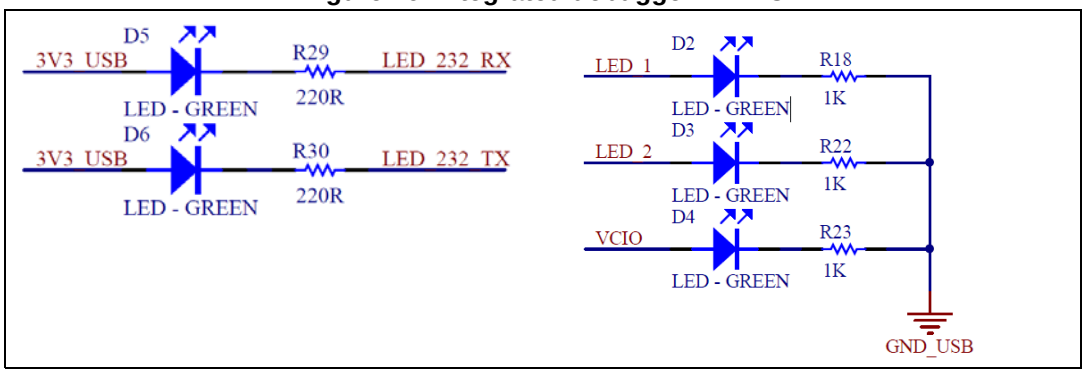

Figure 17. JTAG Port - connector

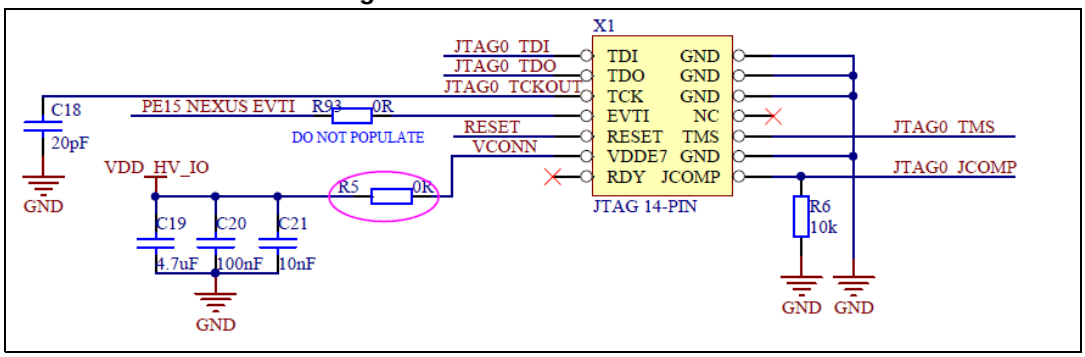

Figure 18. JTAG and Internal programmer – jumper options

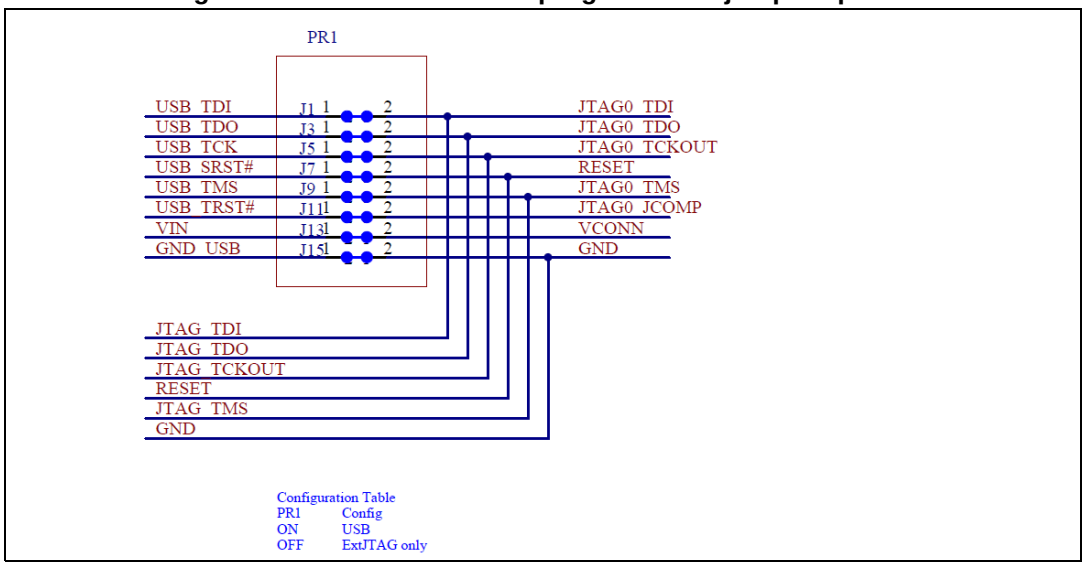

2.8 High Speed CAN interface

Two CAN channels are located in the P2 male connector; they can be selected by setting the two jumpers JP6 and JP8.

The CAN module is based on the transceiver AMIS-30663 that supports high-speed CAN.

Regarding the CAN connector, the two basic CAN channels are located in a DB9 male connector and they can be selected with a jumper option (JP19 and JP20).

Figure 19. CAN section

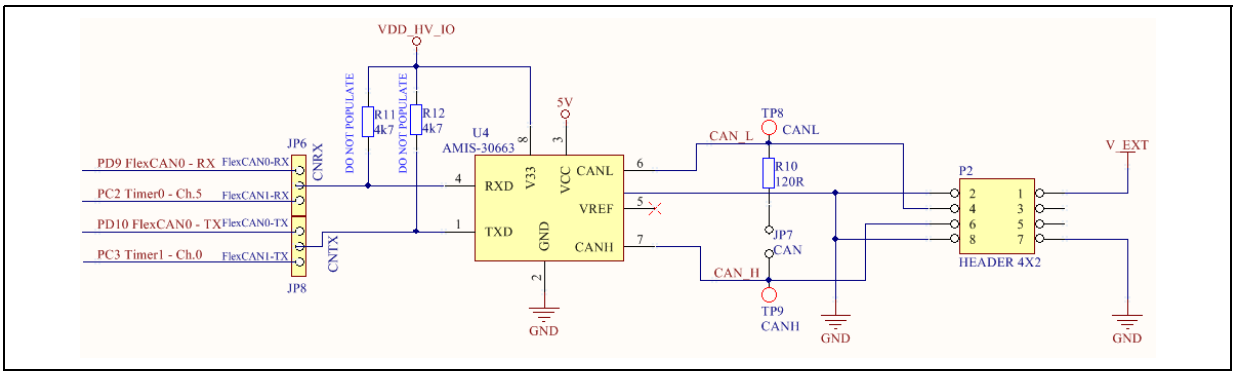

The jumper JP7 connects the termination resistor for CAN bus (120 Ω). TP8 and TP9 allow monitoring the output signals CANL and CANH.

2.9 LINFlex and UART

The LINFlex supports LIN Master mode, LIN Slave mode and UART mode.

Figure 20 shows the LINFlex section; the L9637 is the ISO9141 interface chip. *Figure 21* shows the jumper to configure this section.

Figure 20. LIN

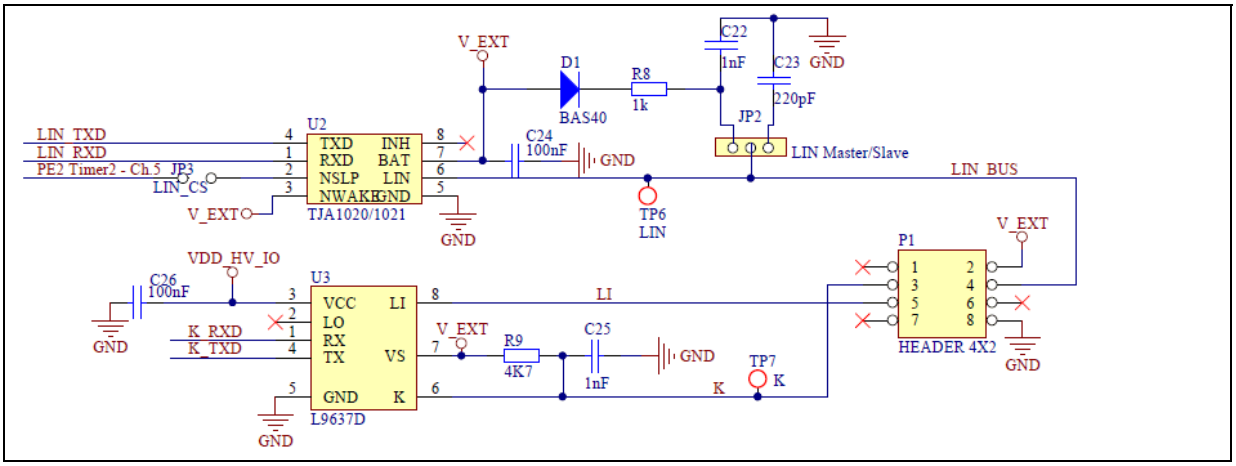

Figure 21. LIN – Jumper configuration

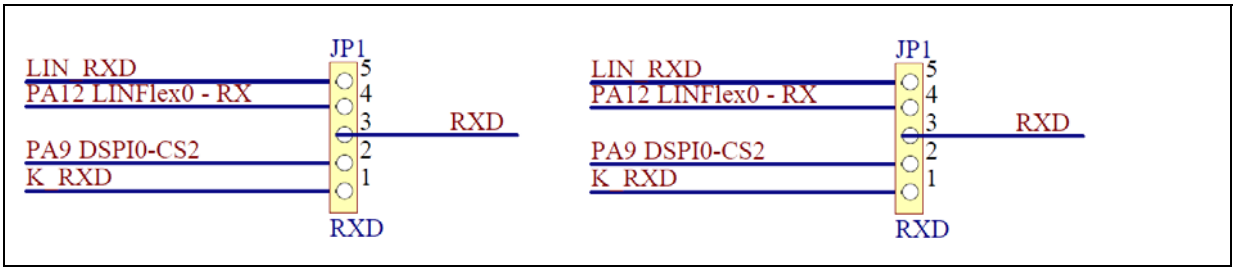

2.10 Arduino connectors

The connectors P4, P5, P6 and P7 are female connectors Arduino-Uno compatible. These headers make it easy to expand the functionality of the board and most shields designed for Arduino can fit these connectors.

Figure 22. Arduino-Uno compatible Connectors - part 1

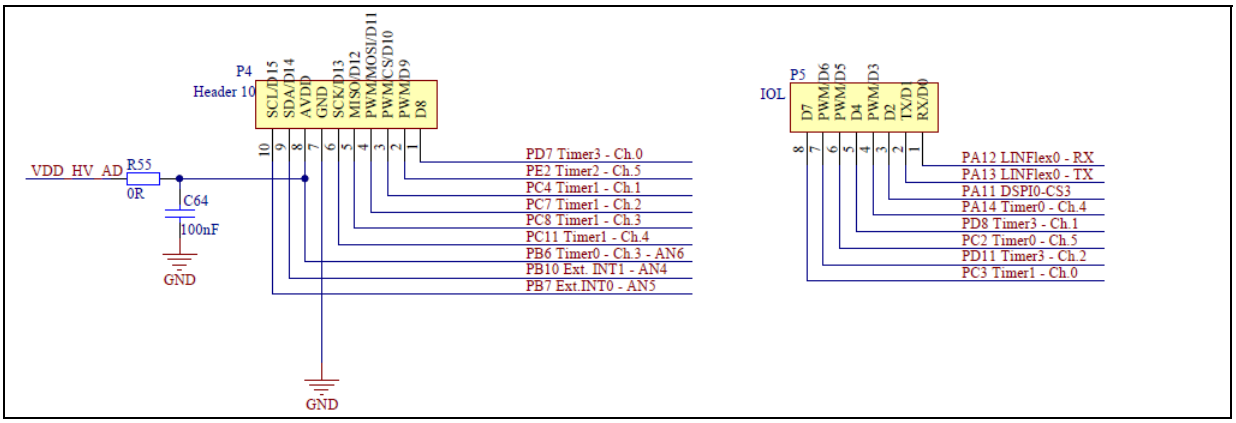

Figure 23. Arduino-Uno compatible Connectors – part 2

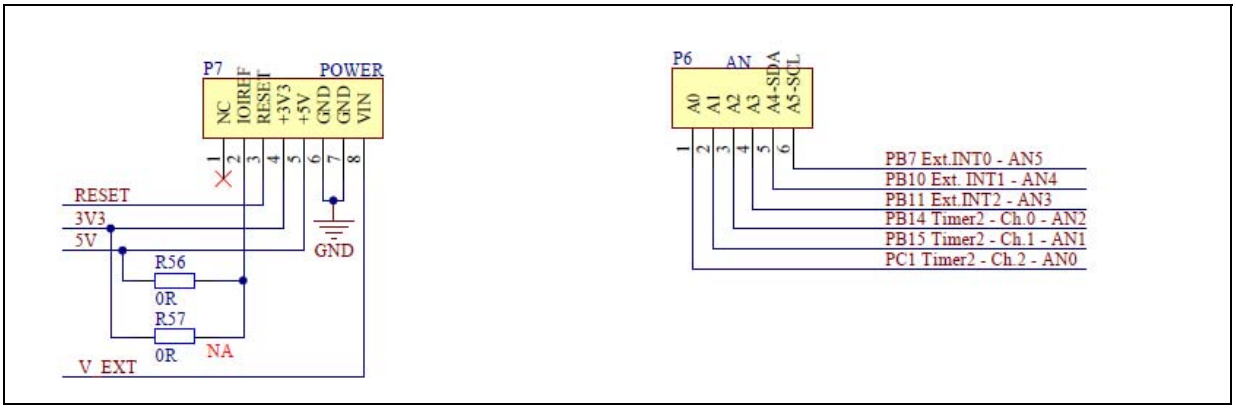

2.11 I/O header

The I/O microcontroller pins are connected to a 4 x 37 pin array (connector X3). *Figure 24* shows the schematic diagram and *Table 5* the summary table. Some 0R allow the user to customize the connections. To improve the labels readability please refer to the schematic diagram.

Figure 24. I/O header (schematic)

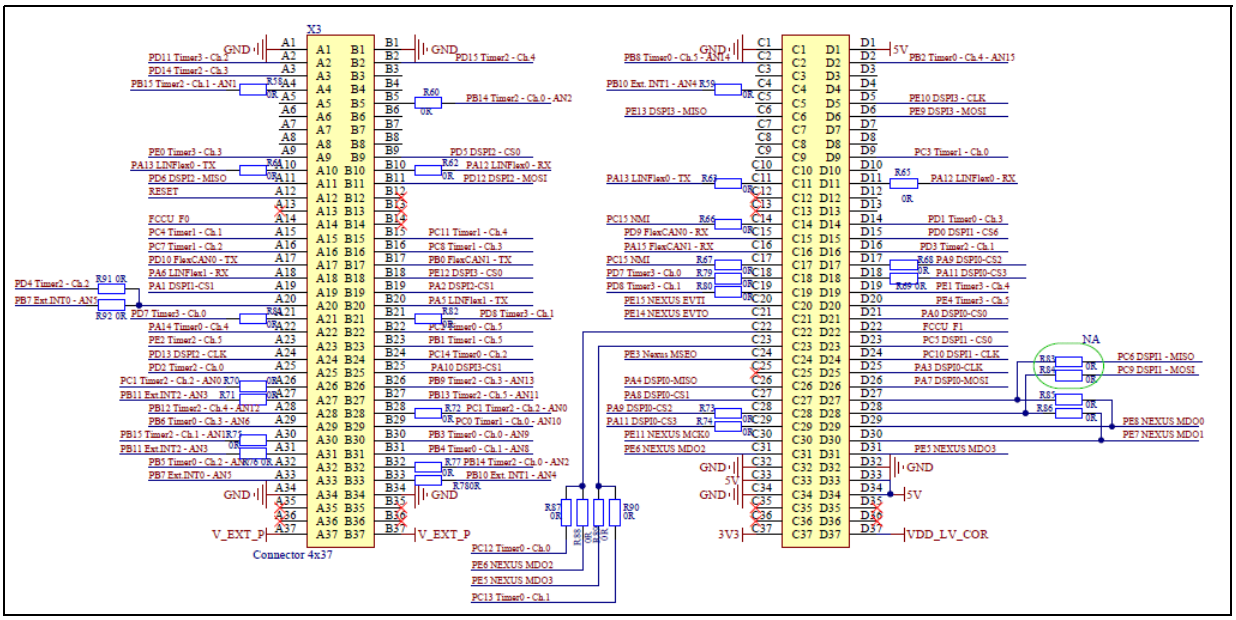

Table 5. I/O header table (part 1)

X3 pin name	Port name	Function	X3 pin name	Port name	Function
A1	GND		B1	GND	
A2	PD[11]	Timer 3 - ch. 2	B2	PD[15]	Timer 2 - ch. 4
A3	PD[14]	Timer 2 - ch. 3	B3	NC	

Table 5. I/O header table (part 1) (continued)

X3 pin name	Port name	Function	X3 pin name	Port name	Function
A4	PB[15]	ADC ch. 1	B4	NC	
A5	NC		B5	PB[14]	ADC ch. 2
A6	NC		B6	NC	
A7	NC		B7	NC	
A8	NC		B8	NC	
A10	PA[13]	LINFlex 0 - TX	B10	PA[12]	LINFlex 0 - RX
A12	RESET		B12	NC	
A13	NC		B13	NC	
A14	—	FCCU_F0	B14	NC	
A15	PC[4]	DSPI 1 - CS 0	B15	PC[11]	DSPI 1 - CLK
A16	PC[7]	DSPI 1 - MOSI	B16	PC[8]	DSPI 1 - MISO
A17	PD[10]	FlexCAN 0 - TX			
A20	PB[7]	ADC ch. 5			
A21	PD[7]	LINFlex 1 - RX	B21	PD[8]	LINFlex 1 - TX
A22	PA[14]	Timer 0 - ch. 4	B22	PC[2]	Timer 0 - ch. 5
A23	PE[2]	Timer 2 - ch. 5			
A26	PC[1]	ADC ch. 0			
A27	PB[11]	ADC ch. 3			
			B28	PC[1]	ADC ch. 0
A29	PB[6]	ADC ch. 6			
A30	PB[15]	ADC ch. 1	B30	PB[3]	ADC ch. 9
A31	PB[11]	ADC ch. 3	B31	PB[4]	ADC ch. 8
A32	PB[5]	ADC ch. 7	B32	PB[14]	ADC ch. 2
A33	PB[7]	ADC ch. 5	B33	PB[10]	ADC ch. 4
A34	GND		B34	GND	
A35	NC		B35	NC	

Table 5. I/O header table (part 1) (continued)

X3 pin name	Port name	Function	X3 pin name	Port name	Function
A36	NC		B36	NC	
A37	V_EXT_P		B37	V_EXT_P	

Table 6. I/O header table (part 2)

X3 pin name	Port name	Function	X3 pin name	Port name	Function
C1	GND		D1	5V	
C3	NC		D3	NC	
C4	PB[10]	ADC ch. 4	D4	NC	
C5	NC				
C7	NC		D7	NC	
C8	NC		D8	NC	
C9	NC		D9	PC[3]	Timer 1 - ch. 0
C10	NC		D10	NC	
C11	PA[13]	LINFlex 0 - TX	D11	PA[12]	LINFlex 0 - RX
C12	NC		D12	NC	
C13	NC		D13	NC	
C14	PC[15]	DSPI 1 - CS 2			
C15	PD[9]	FlexCAN 0 - RX			
C17	PC[15]	DSPI 1 - CS 2	D17	PA[9]	Timer 0 - ch. 2
C18	PD[7]	LINFlex 1 - RX	D18	PA[11]	Ext. INT 4
C19	PD[8]	LINFlex 1 - TX			
C20	PE[15]	Nexus EVTI			
C21	PE[14]	Nexus EVTO	D21	PA[0]	DSPI 0 - CS 0
C22	PE[6]	Nexus MDO 2	D22	—	FCCU_F1
C23	PE[5]	Nexus MDO 3			
C24	PE[3]	Nexus MSEO			
C25	NC		D25	PA[3]	DSPI 0 - CLK
C26	PA[4]	DSPI 0 - MISO	D26	PA[7]	DSPI 0 - MOSI
C27	PA[8]	Timer 0 - ch. 1	D27	PE[8]	Nexus MDO 0

Table 6. I/O header table (part 2) (continued)

X3 pin name	Port name	Function	X3 pin name	Port name	Function
C28	PA[9]	Timer 0 - ch. 2	D28	PE[7]	Nexus MDO 1
C29	PA[11]	Ext. INT 4	D29	PE[8]	Nexus MDO 0
C30	PE[11]	Nexus MCK0	D30	PE[7]	Nexus MDO 1
C31	PE[6]	Nexus MDO 2	D31	PE[5]	Nexus MDO 3
C32	GND		D32	GND	
C33	5V		D33	5V	
C34	GND		D34	5V	
C35	NC		D35	NC	
C36	NC		D36	NC	
C37	3V3		D37	VDD_LV_COR	

Table 7. I/O header – 0R option

Resistor	Assembled	Resistor	Assembled
R58	N	R76	Y
R59	N	R77	Y
R60	N	R78	Y
R61	N	R79	N
R62	N	R80	N
R63	Y	R81	Y
R65	Y	R82	Y
R66	Y	R83	Y
R67	N	R84	Y
R68	N	R85	N
R69	N	R86	N
R70	N	R87	Y
R71	N	R88	N
R72	Y	R89	N
R73	Y	R90	Y
R74	Y	R91	Y
R75	Y	R92	N

3 Jumper configuration

Table 8. Jumpers configuration

Jumper name	Function	Status	Note
JP1	RXD	OFF	
JP10	VDD_HV_IO	3.3V	
JP11	SARADC	3.3V	
JP12	User button	ON	Soldered jumpers
JP13	User button	ON	
JP14	Led User	ON	
JP14	User button	ON	
JP16	Led User	ON	
JP17	Led User	ON	
JP18	ADC	ON	Soldered jumpers
JP19	ADC	ON	Soldered jumpers
JP3	LIN_CS	OFF	
JP4	TXD	OFF	
JP5		OFF	
JP6	CNRX	ON	RX position
JP8	CNTX	ON	TX position
JP7	CAN termination Load	OFF	
JP9	Serial Comm	OFF	

Appendix A General handling precautions

The following precautions are recommended when using the SPC570S-DISP:

1. do not modify or manipulate the board when the DC supply or the USB cable is connected to the board;
2. do not supply the board with an external DC source higher than 12 V;
3. the connectors and cables should be plugged and removed when the board is not supplied;
4. it is recommended to use antistatic tools.

Revision history

Table 9. Document revision history

Date	Revision	Changes
18-Feb-2016	1	Initial release.
08-Jun-2017	2	Updated *Figure 19: CAN section*.

IMPORTANT NOTICE – PLEASE READ CAREFULLY

STMicroelectronics NV and its subsidiaries (“ST”) reserve the right to make changes, corrections, enhancements, modifications, and improvements to ST products and/or to this document at any time without notice. Purchasers should obtain the latest relevant information on ST products before placing orders. ST products are sold pursuant to ST’s terms and conditions of sale in place at the time of order acknowledgement.

Purchasers are solely responsible for the choice, selection, and use of ST products and ST assumes no liability for application assistance or the design of Purchasers’ products.

No license, express or implied, to any intellectual property right is granted by ST herein.

Resale of ST products with provisions different from the information set forth herein shall void any warranty granted by ST for such product.

ST and the ST logo are trademarks of ST. All other product or service names are the property of their respective owners.

Information in this document supersedes and replaces information previously supplied in any prior versions of this document.

© 2017 STMicroelectronics – All rights reserved