THIS DRAWING IS UNPUBLISHED. RELEASED FOR PUBLICATION -.- .
© COPYRIGHT - BY TYCO ELECTRONICS CORPORATION. ALL RIGHTS RESERVED.

LOC	DIST
ES	00

REVISIONS

P	LTR	DESCRIPTION	DATE	DWN	APVD
	A	REVISED FB00-0217-04	16DEC04	H.H	I.E

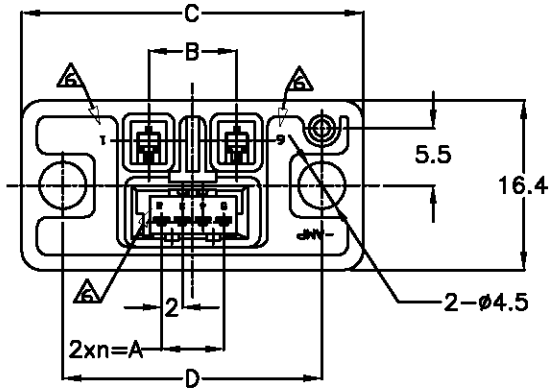

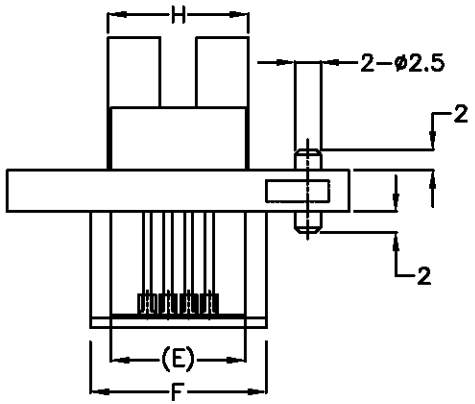

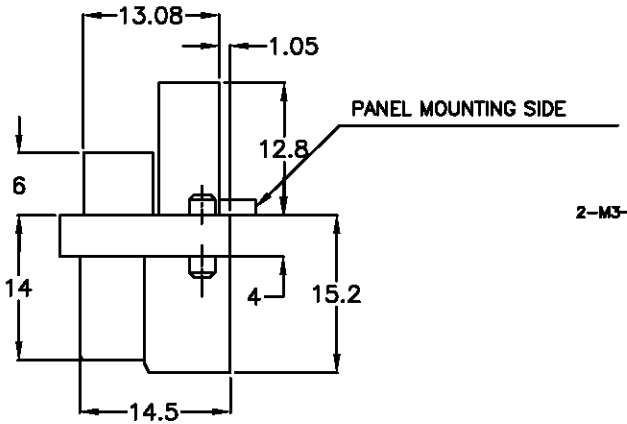

NOTES:

1. MATERIAL: HOUSING: THERMOPLASTIC, COLOR: BLACK 94V-0
   CONTACT: COPPER ALLOY
   FINISH: MATING SIDE: PLATE NICKEL OVERALL PLATE COLD
   CT SIDE: PLATE NICKEL ALL OVER MATTE TIN PL.
2. USE UP CONTACT 175149-X, 175150-X
3. RECOMMENDED PANEL CUT DIMENSION

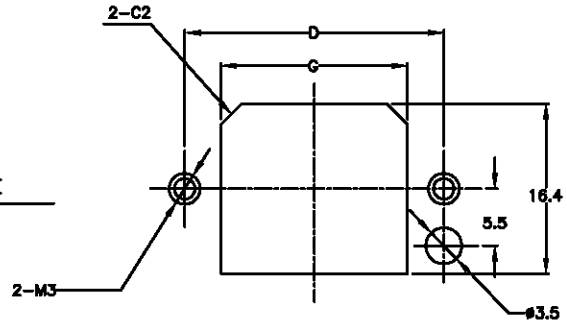

RECOMMENDED PANEL CUT DIMENSION
(GENERAL TOLERANCE ±0.2)

4. MATING CONN: 292184-1
5. USE CT REC. CONN: 173977-X(MT CONN), 175778-X(CRIMP HSG)
   175102-X & 175161-X (CRIMP CONTACT)
6. CIRCUIT NO: SEE TABLE

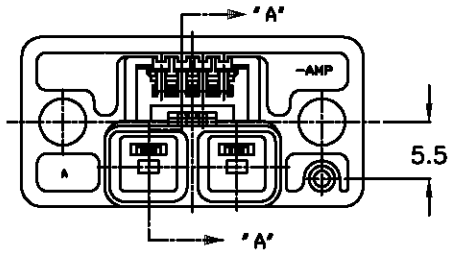

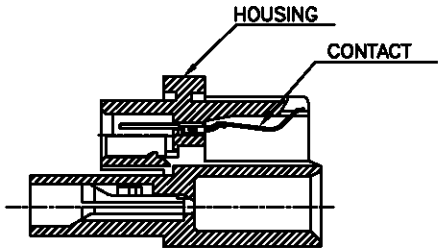

SECT"A"-"A"

1,2,3,4,5,6	13.5	18	17	13	25	33	8.5	6	3	6	292180-1
6 CIRCUIT NO	H	G	F	E	D	C	B	A	n	Pos.	PART NUMBER

THIS DRAWING IS A CONTROLLED DOCUMENT.

TOLERANCES UNLESS OTHERWISE SPECIFIED
10>° : ±0.2
30>°>10 :±0.25
100>°>30 :±0.3
ANGLE :±3°

DIMENSIONS: MM

TOLERANCES UNLESS OTHERWISE SPECIFIED:
0 PLC ± 0.15
1 PLC ± 0.15
2 PLC ± 0.15
3 PLC ± 0.15
4 PLC ± 0.15
ANGLES ± 1°

MATERIAL: SEE NOTES 1
FINISH: SEE NOTES 1

DWN J.JIANG 05FEB03
CHK S.YAO 05FEB03
APVD T.SASAKI 05FEB03
PRODUCT SPEC 108-60022
APPLICATION SPEC
WEIGHT

Tyco Electronics
Tyco Electronics Corporation
Shanghai, P.R.China,200233

NAME: CAP ASS'Y WITHOUT COMMONING TAB FOR HYBRID MINI-DRAWER CONNECTOR

SIZE	CAGE CODE	DRAWING NO	RESTRICTED TO
A3	00779	C-292180	—

CUSTOMER DRAWING | SCALE 2:1 | SHEET 1 OF 1 | REV A

AMP 1470-10 REV 31MAR2000