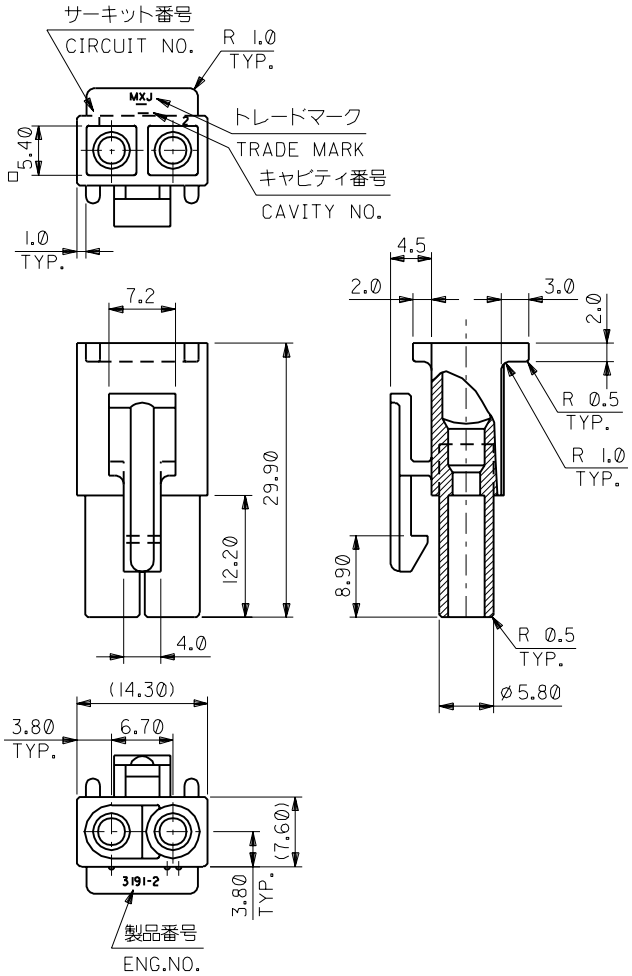

注)
NOTE.

1. ( ) 内寸法は参考
(DIMENSIONS IN ( ) ARE REFERENCE)

3191-02R1-201	39-03-6025	ナイロン66 NYLON66	94V-0
3191-02R1	39-03-6024	ナイロン66 NYLON66	94V-2
ENG.NO.	EDP.NO.	材料 MATERIAL NO.	

DWG. NO. SD-3191-02R1-*

DO NOT SCALE DRAWING

ES4NO. DRWN: CH'K: APPR:	ES3NO. DRWN: CH'K: APPR:	ES2NO. DRWN: CH'K: APPR:	ES1NO. DRWN: CH'K: APPR:

REDRAWN

ES0NO. JC2000-0626	DRWN: K.KOHAMA '00/ 3/28	CH'K: T.YAMAGUCHI '00/ 3/31	APPR: M.FUKUSHIMA '00/ 3/31

REV

MATERIAL 材料: 表参照 SEE TABLE

FINISH 仕上げ: —//—

WIRE RANGE 適用電線範囲: —//—

INS. RANGE 被覆外径: —//—

DESCRIPTION

GENERAL TOLERANCES: (UNLESS SPECIFIED) 一般公差

10 UNDER 未満	±0.25 ~~±0.2~~
10 OVER 以上 30 UNDER 未満	±0.3 ~~±0.25~~
30 OVER 以上	±0.35 ~~±0.3~~
ANGLE 角度	±3°

SCALE 2:1

DESIGN UNITS ☒mm ☐INCH

THIRD ANGLE PROJECTION

DIMENSIONS: ☐ mm/INCH ☐ INCH/mm ☒ mm ONLY

SHT | REV

REVISE ON CAD ONLY

DRAWN BY & DATE K.KOHAMA '00/ 3/28

CHECKED BY & DATE T.YAMAGUCHI '00/ 3/31

APPROVED BY & DATE M.FUKUSHIMA '00/ 3/31

CAD FILENAME S319102.S10

TITLE: 2 CKT. REC. HS'G (.093 DIA. TERM.)

molex MOLEX INCORPORATED

MATERIAL NO. 3191-02R1-* | DRAWING NO. SD-3191-02R1-* | SHEET NO. 1

THIS DRAWING CONTAINS INFORMATION THAT IS PROPRIETARY TO MOLEX INCORPORATED AND SHOULD NOT BE USED WITHOUT WRITTEN PERMISSION.

SIZE B

S319102.S10

EN-02J(097) MXJ-54