LTR	EN	DESCRIPTION	APPR	BY	DATE
A	–	INITIAL RELEASE	RB	NH	12–18–03

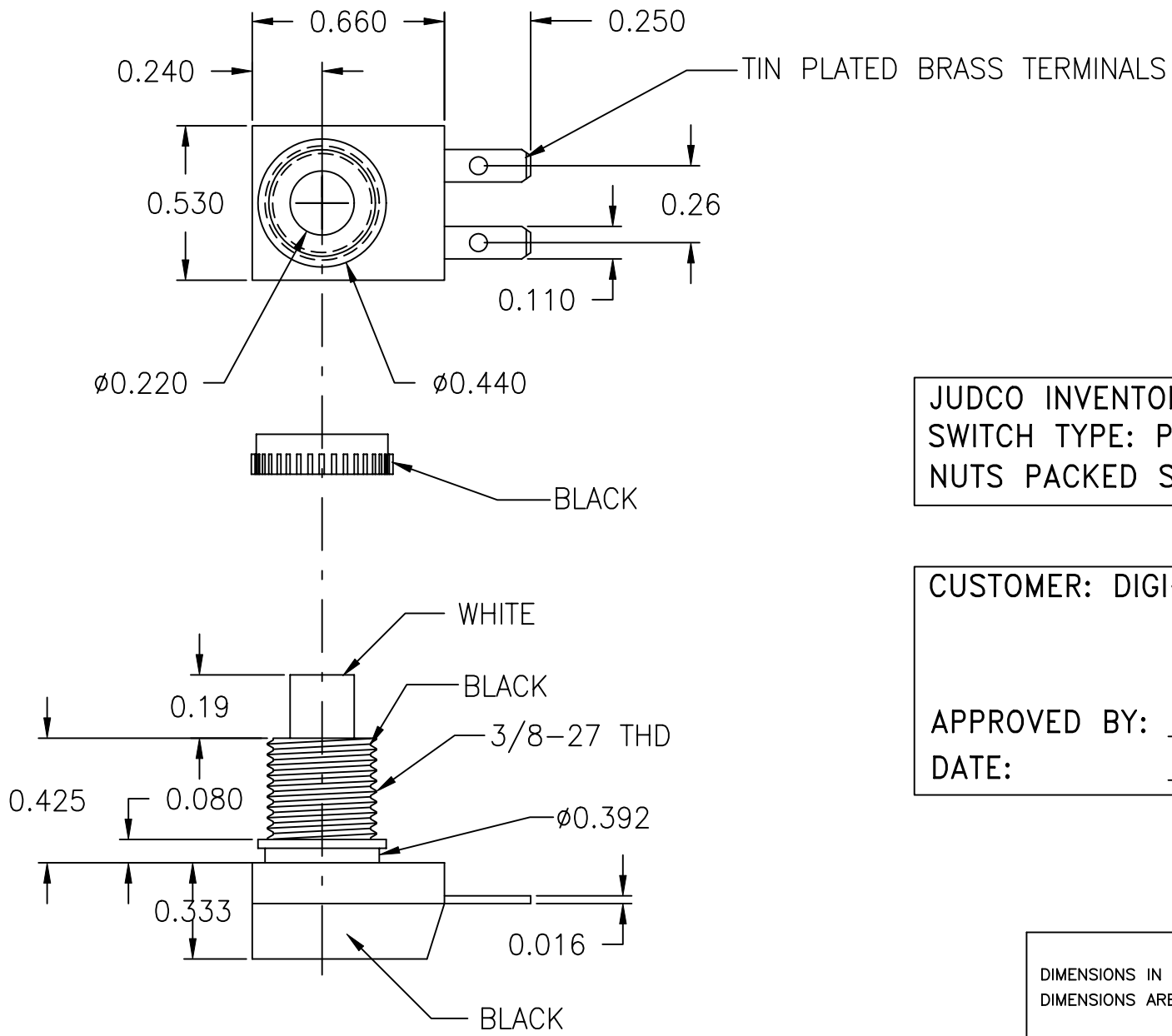

JUDCO INVENTORY NO. 40–3438–02
SWITCH TYPE: PUSH ON–PUSH OFF, SPST
NUTS PACKED SEPARATELY.

CUSTOMER: DIGI–KEY

APPROVED BY: _____

DATE: _____

DIMENSIONS IN INCHES
DIMENSIONS ARE REFERENCE

DRAWN: NH 12–18–03
APPR: KJ 12–18–03

1415U527A.DWG

JUDCO ®
HARBOR CITY CALIFORNIA

TITLE OUTLINE J–188A–1

DWG. NO. 1415–527

SHEET 1 OF 1

This document embodies a product, component, and/or design proprietary to JUDCO MANUFACTURING INC., and which is protected either as a trade secret, by U.S. Patent, or by copyright. It may not be used in any way without written express consent of JUDCO MANUFACTURING INC.

Downloaded from Elcodis.com electronic components distributor