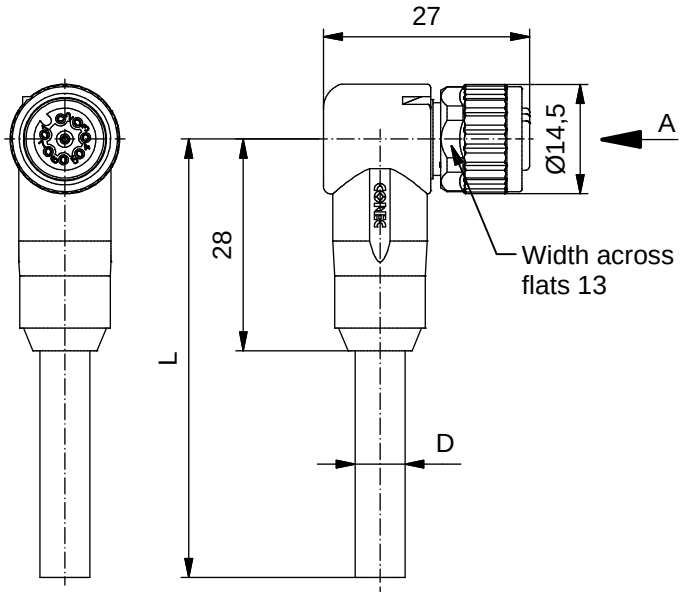

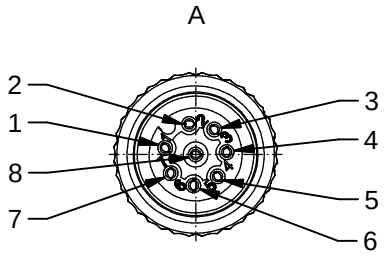

Technical specification:

Rated voltage: IEC 61076-2-101	30 V
Current rating: IEC 61076-2-101	2 A at 40℃
Insulation resistance: IEC 60512	>=100 MΩ
Pollution degree: IEC 60664-1	3/2
Degree of protection: IEC 60529	IP 67, in mated condition
Temperature range:	-30℃ ... +80℃
Mating cycles: IEC 60512-9a	>=100

Materials:

Contact:	CuZn
Contact plating:	Nickel, gold plated
Contact carrier:	TPU
Sealing:	FPM
Coupling nut:	GD-Zn, nickel plated
Moulding body:	TPU, UL 94, grey

Installation specification:

Recommended torque:	0,6 Nm
Conec installation tool:	Torque wrench: 36-000200 Insert across flats 13: 36-000220

Contact assignment:

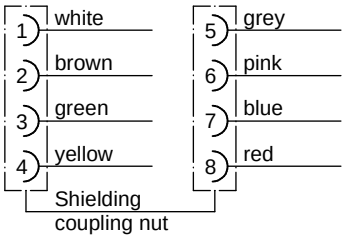

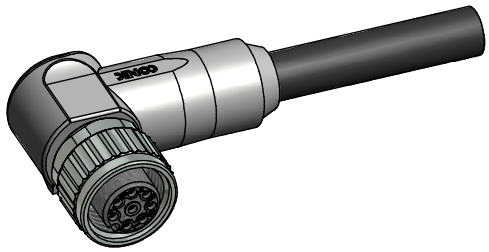

Part no:	Description:	Length L:	Cable:
43-12431	SAL - 12S - RKW8 - 2 / G3	2m	PVC, UL 2464, grey, 8x0,25mm² Cable: 781-G32800
43-12432	SAL - 12S - RKW8 - 3 / G3	3m	
43-12433	SAL - 12S - RKW8 - 5 / G3	5m	
43-12434	SAL - 12S - RKW8 - 10 / G3	10m	
43-xxxxx	SAL - 12S - RKW8 - ... / G3	x	

D see data sheet cable

DO NOT ALTER CAD DRAWING BY HAND

Directive 2011/65/EU RoHS compliant

Index: b 12.08.14 MG Ä5280
material of contact carrier changed, data sheet revised

tolerance of cable: L <= 4m: L + 40mm
L > 4m: L + 1%

general tolerance: 0 ± 0,50mm
0,0 ± 0,25mm
0,00 ± 0,10mm

THIS DRAWING MAY NOT BE COPIED OR REPRODUCED IN ANY WAY, AND MAY NOT BE PASSED ON TO A THIRD PARTY WITHOUT WRITTEN PERMISSION. OWNERSHIP AND COPYRIGHT OF CONEC GmbH

dim. in mm

	date	name
drawn	13.10.08	Mankopf
appd.	13.10.08	Fromm

title: Female connector M12x1 angled, 360°-shielding

dwg no: 43K1A760

part no: see table