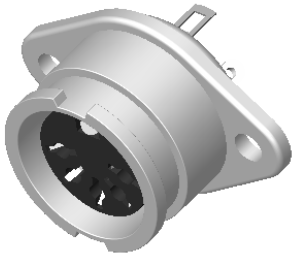

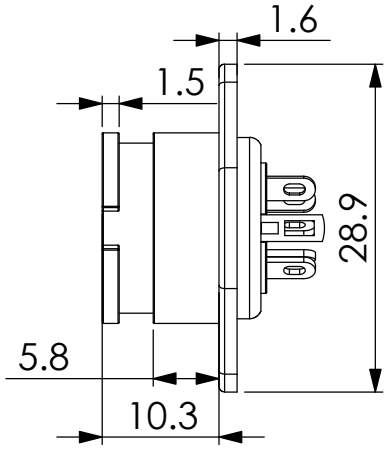

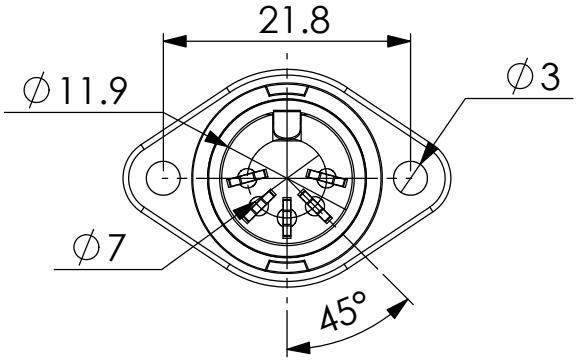

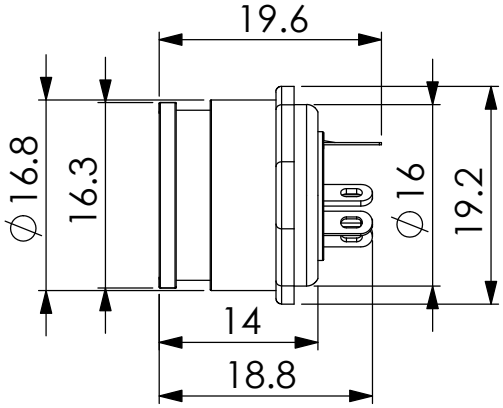

Specifications
rating :
100V AC 4A MAX
contact resistance :
pins-30mΩ MAX; shell-50mΩ MAX
insulation resistance :
MIN 100 MEGΩ @500V DC
voltage withstand :
250V AC R.M.S. for 1 minute

No.	Description	Material	Treat	Q'ty
4	Terminals	Brass	Silver Ptd.	5
3	Housing	ABS		1
2	Negative Contact	Copper	Nickel Ptd.	1
1	Shield Cover	Zn Alloy	Nickel Ptd.	1

品名: ITEM :	5P180 DIN SOCKET BAYONET LOCKING		一般公差	SHEET:	單位: unit:	mm	日期: date:	'07/01/23	繪圖: drwn by:	DanielShyr
料號: PART NO.	490977	圖號: DRW NO.	.X +/-0.25 .XX +/-0.10	1 / 1	比例: scale:	3 : 2	版本: version:	V. 1.0	核准: aprvld by:	SkyShyr