500-011
EMI/RFI Micro-D Backshell
with Shield Sock

STYLE T - TOP ENTRY

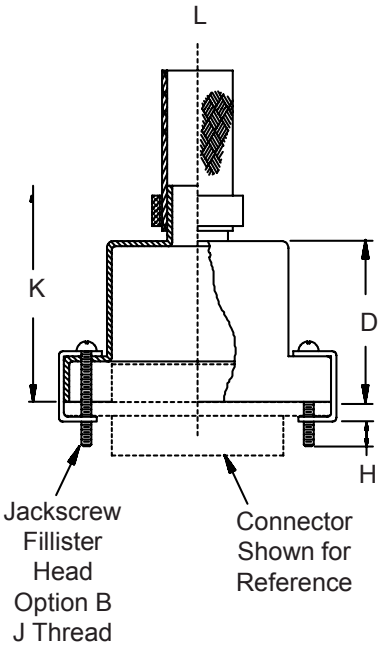

STYLE S - SIDE ENTRY

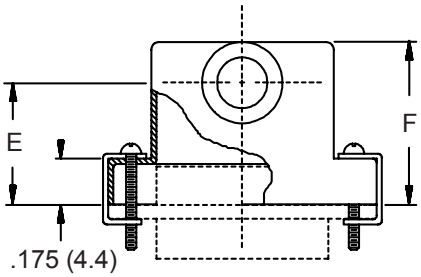

STYLE E - 45° ENTRY

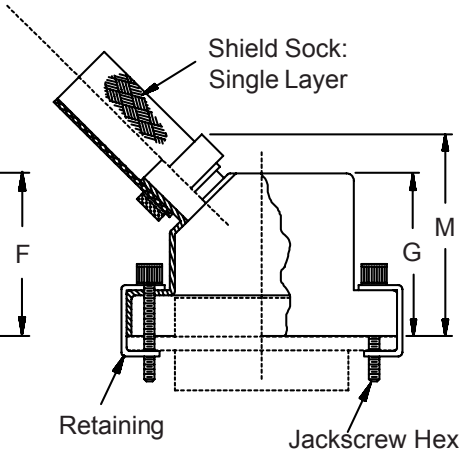

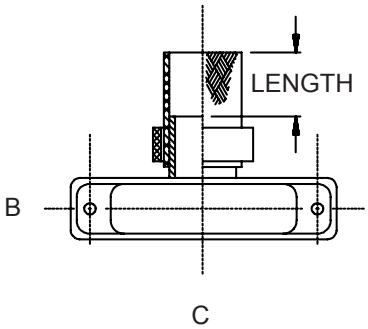

Metric dimensions (mm) are indicated in parentheses.

HOW TO ORDER

Series	Cable Entry Style	Basic Part Number	Shell* Plating	Shell Size (Table I)	Hardware Options *	Cable Entry (Table II)	Shield Sock Length
500	**T** – Top **S** – Side **E** – 45°	011	**C** – Black Anodize **E** – Chem. Film **J** – Gold Iridite Over Cadmium Over Electroless Nickel **M** – Electroless Nickel **NF** – Cadmium, Olive Drab Over Electroless Nickel **Z2** – Gold	9 15 21 25 31 37 51 100	**B** – (2) Male Fillister Head Jackscrews **H** – (2) Male Hex Socket **F** – (2) Female Jackpost **FB** – (1) Female Jackpost And (1) Male Jackpost **FH** – (1) Female Jackpost and (1) Male Hex Socket	04 05 06 07 08 09 10 11 12	Length in 1 inch increments (e.g. 6 = 6 inches)
Sample Part Number:							
500	**T**	**011**	**M**	**21**	**B**	**06**	**— 6**

*** SEE PAGE C-4 FOR COMPLETE INFORMATION**

© 2011 Glenair, Inc. CAGE Code 06324 Printed in U.S.A.

500-011
EMI/RFI Micro-D Backshell
with Shield Sock

Glenair®

TABLE I: DIMENSIONS

Shell Size	A	B	C	D	E	F
09	.775 (19.7)	.36 (9.1)	.565 (14.4)	.32 (8.1)	.435 (11.0)	.607 (15.4)
15	.925 (23.5)	.36 (9.1)	.715 (18.2)	.44 (11.2)	.440 (11.2)	.643 (16.3)
21	1.075 (27.3)	.36 (9.1)	.865 (22.0)	.56 (14.2)	.458 (11.6)	.677 (17.2)
25	1.175 (29.8)	.36 (9.1)	.965 (24.5)	.62 (15.7)	.483 (12.3)	.718 (18.2)
31	1.325 (33.7)	.36 (9.1)	1.115 (28.3)	.68 (17.3)	.476 (12.1)	.726 (18.4)
37	1.475 (37.5)	.36 (9.1)	1.265 (32.1)	.72 (18.3)	.478 (12.2)	.744 (18.9)
51	1.425 (36.2)	.40 (10.2)	1.215 (30.9)	.75 (19.1)	.548 (13.9)	.829 (21.1)
100	2.160 (54.9)	.45 (11.4)	1.800 (45.7)	.81 (20.6)	.687 (17.4)	.984 (25.0)

Shell Size	G	H REF	J Thread	K ±.03 (0.8)	M Max	Max Entry Table II
09	.650 (16.5)	.154 (3.9)	2-56 UNC-2	.75 (19.1)	1.00 (25.4)	08
15	.700 (17.8)	.154 (3.9)	2-56 UNC-2	.88 (22.4)	1.03 (26.2)	08
21	.735 (18.7)	.154 (3.9)	2-56 UNC-2	1.00 (25.4)	1.05 (26.7)	08
25	.800 (20.3)	.154 (3.9)	2-56 UNC-2	1.06 (26.9)	1.09 (27.7)	08
31	.860 (21.8)	.154 (3.9)	2-56 UNC-2	1.12 (28.4)	1.13 (28.7)	09
37	.925 (23.5)	.154 (3.9)	2-56 UNC-2	1.16 (29.5)	1.16 (29.5)	09
51	.975 (24.8)	.154 (3.9)	2-56 UNC-2	1.19 (30.2)	1.19 (30.2)	10
100	1.050 (26.7)	.184 (4.7)	4-40 UNC-2	1.25 (31.8)	1.25 (31.8)	12

TABLE II: CABLE ENTRY

Dash No.	L Entry
04	.125 (3.2)
05	.156 (4.0)
06	.188 (4.8)
07	.219 (5.6)
08	.250 (6.4)
09	.281 (7.1)
10	.312 (7.9)
11	.344 (8.7)
12	.375 (9.5)

Metric dimensions (mm) are indicated in parentheses.

© 2011 Glenair, Inc.

Mouser Electronics

Authorized Distributor

Click to View Pricing, Inventory, Delivery & Lifecycle Information:

Glenair:

500S011M09B08-6 500S011M37B09-6 500S011M37B12-6 500S011M51B10-6 500T011B15B06-6 500T011M51B06-6 500T011M51F06-6 500S011M51B06-6 500T011M09B04-6 500T011M09F04-6 500T011M21B04-6 500T011M21B06-6 500T011M51B10-6 500T011M25H08-10 500S011M09B04-6 500T011M37B09-10 500T011M37B09-6 500T011M15H08-10 500T011J31B09-10 500T011M09B08-6 500T011M100E12-2 500T011M21B08-8 500T011M25B08-6 500T011M25B08-8 500T011M31B09-8 500T011M37B09-8 500T011M51E10-2 500T011M15H06-18 500T011M25H08-18 500T011M15H08-12 500T011M25H08-6