番号 NO.	名称 NAME	原料 MATERIAL	数量 QT'Y	仕上げ FINISH
①	ハウジング HOUSING	PBT PBT	1	ガラス30%, UL94V-0 G.F.30%
②	ターミナル TERMINAL	リん青銅 (t=0.2) PHOSPHOR BRONZE(t=0.2)	N	全体錫メッキ PRE-TINNED

注) NOTES

1. 原料および仕上げ：表参照
MATERIAL AND FINISH : SEE CHART

2. 製品番号
MATERIAL NO.
51336-**1*
- 極数 CIRCUIT SIZE(02 ～ 20)
- 色 COLOR 10: 白色 WHITE

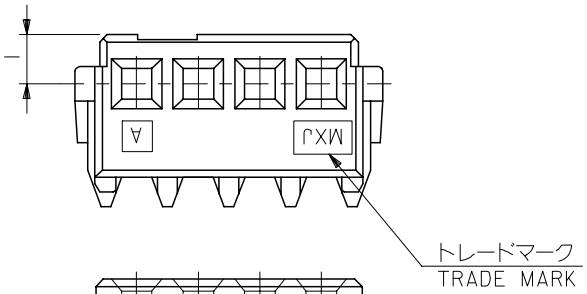

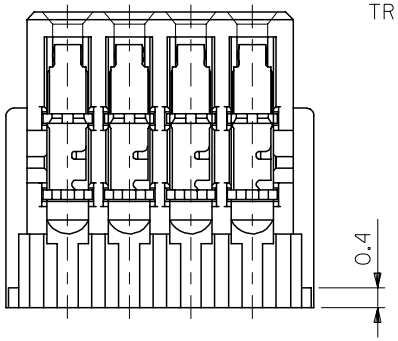

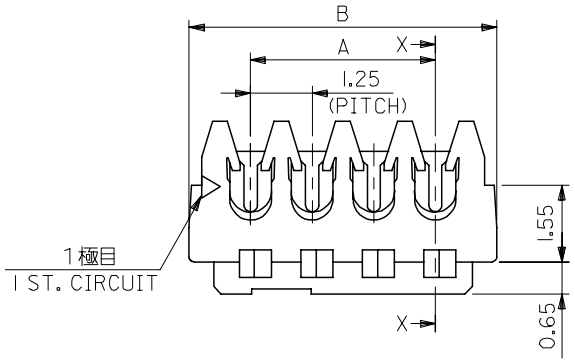

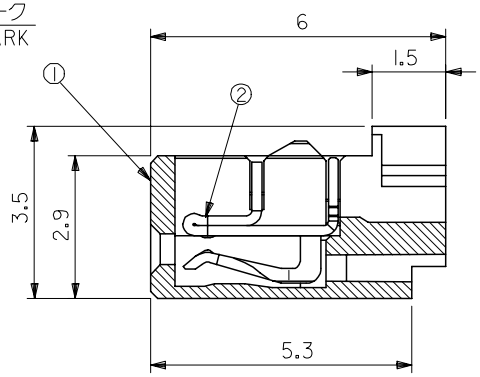

SECTION X-X

B	A	極数 CIRCUIT SIZE	2. 製品番号 MATERIAL NO.	MODEL NO.
26.25	23.75	20	51336-201*	51336-**1*
25	22.5	19	51336-191*	
23.75	21.25	18	51336-181*	
22.5	20	17	51336-171*	
21.25	18.75	16	51336-161*	
20	17.5	15	51336-151*	
18.75	16.25	14	51336-141*	
17.5	15	13	51336-131*	
16.25	13.75	12	51336-121*	
15	12.5	11	51336-111*	
13.75	11.25	10	51336-101*	
12.5	10	9	51336-091*	
11.25	8.75	8	51336-081*	
10	7.5	7	51336-071*	
8.75	6.25	6	51336-061*	
7.5	5	5	51336-051*	
6.25	3.75	4	51336-041*	
5	2.5	3	51336-031*	
3.75	1.25	2	51336-021*	

材料 MATERIAL	SEE CHART
仕上げ FINISH	SEE CHART
適用電線範囲 WIRE RANGE	AWG #26, #28
被覆外径 INS. RANGE	Ø0.8 ~ Ø0.9

RELEASED
EC NO: J2006-1346
DRWN:MNABEI 2005/11/25
CHKD:KTOYODA 2005/11/28
APPR:NUKITA 2005/11/30
DESCRIPTION
REV 0

GENERAL TOLERANCES (UNLESS SPECIFIED)

10 UNDER	±0.2
10 OVER 30 UNDER	±0.25
30 OVER	±0.3
ANGULAR ±3 °	

DRAFT WHERE APPLICABLE MUST REMAIN WITHIN DIMENSIONS

DIMENSION STYLE MM ONLY	SCALE 10:1	DESIGN UNITS METRIC	THIRD ANGLE PROJECTION
DRAWN BY M.NABEI	DATE '05/10/24	TITLE MINI MI2 REC. ASSY (SN)	
CHECKED BY K.TOYODA	DATE '05/10/24		
APPROVED BY N.UKITA	DATE '05/10/24	molex MOLEX INCORPORATED	
MATERIAL NO. SEE CHART		DOCUMENT NO. SD-51336-001	SHEET NO. 1 OF 1
SIZE A3	THIS DRAWING CONTAINS INFORMATION THAT IS PROPRIETARY TO MOLEX INCORPORATED AND SHOULD NOT BE USED WITHOUT WRITTEN PERMISSION		