THIS DRAWING IS UNPUBLISHED. RELEASED FOR PUBLICATION 20
© COPYRIGHT 20 BY TYCO ELECTRONICS CORPORATION. ALL RIGHTS RESERVED.

LOC AA DIST 22

REVISIONS

P	LTR	DESCRIPTION	DATE	DRN	APVD
	A	REV PER ECOS11-0201-04	29-01-05	GA	SF
	B	ECO-06-025366	06-11-06	LAN	JB
	C	ECO-07-000895	17-01-07	LAN	JB
	C1	ECR-08-013498	31-10-08	AEG	BWV

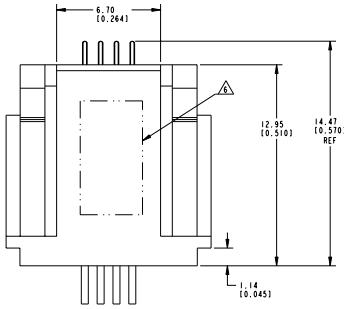

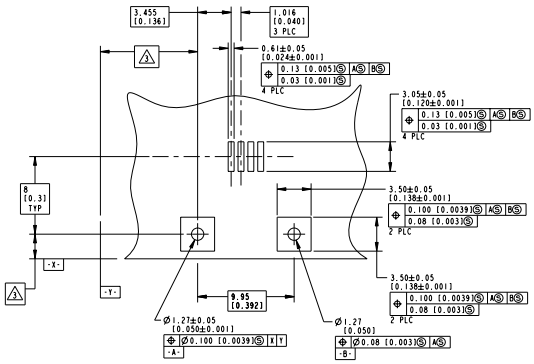

RECOMMENDED PRINTED CIRCUIT BOARD LAYOUT
COMPONENT SIDE
SCALE 5:1

1. MATERIAL:
HOUSING - HIGH TEMPERATURE THERMOPLASTIC, COLOR - PER PART NUMBER TABLE.
TERMINALS - 0.31[.012] THICK COPPER ALLOY PLATED WITH
(SEE TABLE) MINIMUM GOLD IN LOCALIZED GOLD PLATE AREA,
2.5 µm[.000100] MINIMUM MATTE TIN ON TERMINATION END, BOTH OVER
1.27µm[.000050] MINIMUM NICKEL OVER ENTIRE TERMINAL.
BOARDLOCK - PHOS BRONZE, 1/2 HARD, 3.81µm[.000150]
MINIMUM MATTE TIN OVER 1.27µm[.000050] MINIMUM NICKEL ON TERMINAL END.

2. JACK CAVITY CONFORMS TO FCC 47 RULES AND REGULATIONS, PART 68 SUBPART F.

3. DATUM ESTABLISHED BY CUSTOMER.

4. PACKAGING TAPE AND REEL: (PER EIA 481 SPEC)
32mm WIDE TAPE
24mm POCKET PITCH
560mm REEL DIA
600 PIECES PER REEL

5. CONNECTOR SHOULD BE POSITIONED THROUGH PANEL CUTOUT AS SHOWN TO SUPPORT TOP OF MODULAR JACK FOR STRAIN RELIEF

6. MANUFACTURING DATE CODE LOCATED APPROXIMATELY AS SHOWN. FIRST 2 DIGITS ARE YEAR, SECOND 2 DIGITS ARE WORK WEEK, AND LAST DIGIT IS THE DAY OF THE WEEK

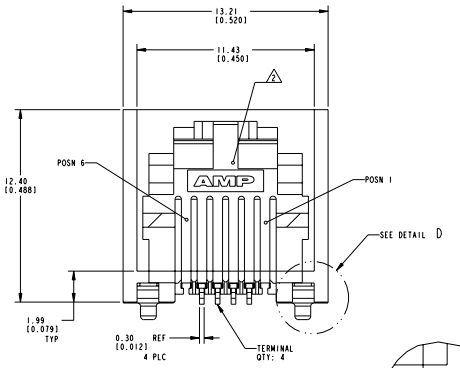

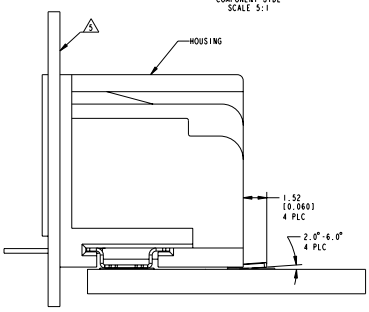

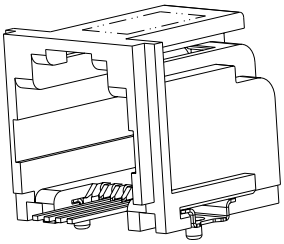

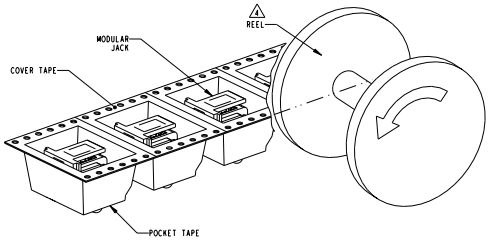

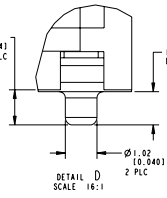

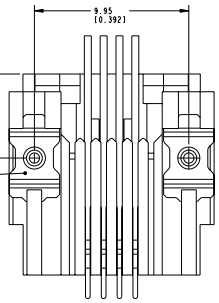

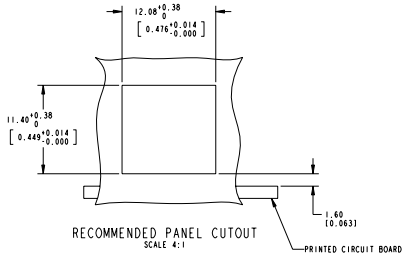

RECOMMENDED PANEL CUTOUT
SCALE 4:1

OBSOLETE	0.76µm[.000030]	GREEN	1-5406545-4
	0.76µm[.000030]	BLACK	1-5406545-3
	0.76µm[.000030]	GRAY	1-5406545-1
OBSOLETE	1.27µm[.000050]	GREEN	5406545-4
	1.27µm[.000050]	BLACK	5406545-3
	1.27µm[.000050]	GRAY	5406545-1
	MIN GOLD THICKNESS	COLOR	PART NUMBER

THIS DRAWING IS A CONFIDENTIAL DOCUMENT AND MUST NOT BE DISCLOSED TO OTHERS WITHOUT WRITTEN AUTHORIZATION FROM TYCO ELECTRONICS.

DIMENSIONS: mm[INCHES]

TOLERANCES UNLESS OTHERWISE SPECIFIED:
0 PLC ±-
1 PLC ±-
2 PLC ±0.13[.005]
3 PLC ±-
4 PLC ±-
ANGLES ±0°

MATERIAL SEE NOTE 1
FINISH SEE NOTE 1

DWN 29JUL05 GA ATTADIA
CHK 29JUL05 GW WESTMAN
APVD 29JUL05 S FLICKINGER

Tyco Electronics Corporation
's-Hertogenbosch, Nederland

NAME MODULAR JACK ASSEMBLY, 1 PORT, 6/4 POSN, SURFACE MOUNT, RIGHT ANGLE, WITH INWARD BOARDLOCKS

PRODUCT SPEC 108-1689
APPLICATION SPEC 114-6040
WEIGHT -

SIZE A1 CAGE CODE 00779 DRAWING NO C-5406545
RESTRICTED TO -
CUSTOMER DRAWING
SCALE 8:1 SHEET 1 OF 1 REV C1

AMP 4005 REV 31MAR2000
Pro/ENGINEER DRAWING

Downloaded from Elcodis.com electronic components distributor