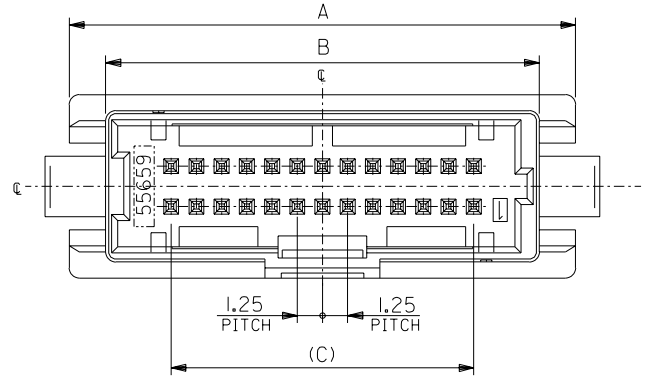

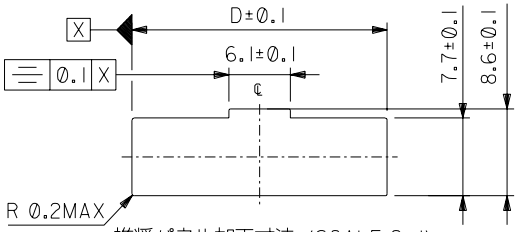

推奨パネル加工寸法 (SCALE:2-1)
RECOMMENDED PANEL CUT DIMENSION

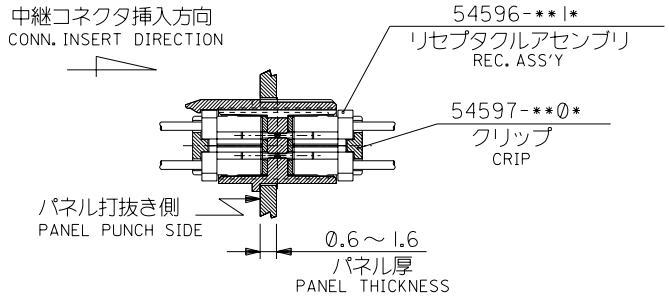

嵌合状態図
MATED & MOUNTED CONNECTOR

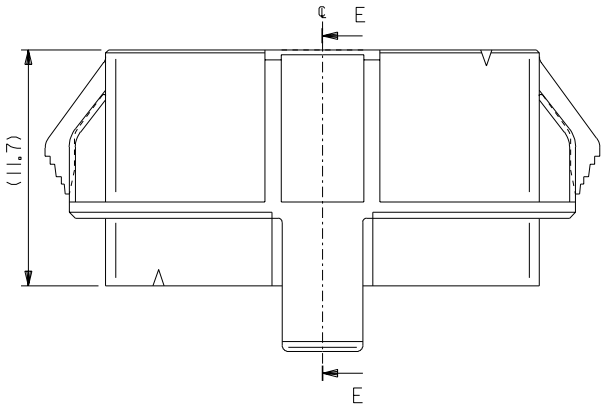

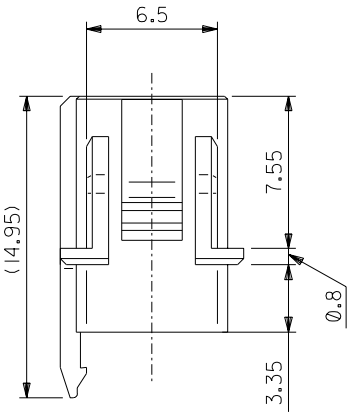

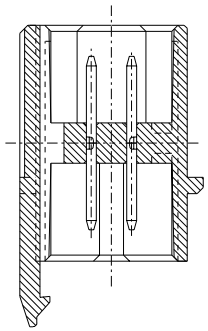

SECTION E-E

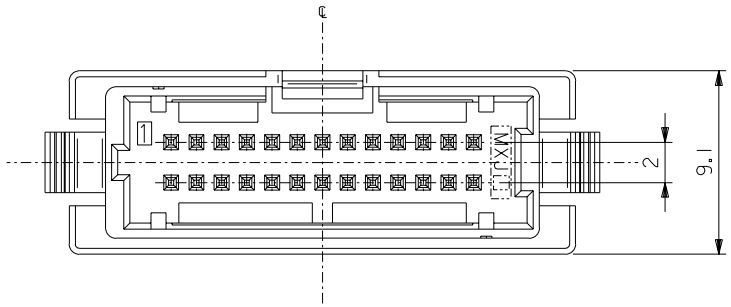

注 記
NOTES

1. 材 質
MATERIAL
ウエハー：ナイロン、UL－94VO
WAFER:NYLON,UL94-V0
ピン：黄銅、スズメッキ
PIN:BRASS,PRE-TINNED
2. 嵌合相手
MATES WITH
リセプタクルアセンブリ:54596-**1*
REC. ASS'Y:54596-**1*
クリップ:54597-**0*
CRIP:54597-**0*
3. 本製品は 55659-**10 の鉛フリー品である。
THIS PRODUCT IS LEAD FREE OF 55659-**10.

34.05	23.75	30.25	33.85	40	55659-4019	
32.8	22.5	29	32.6	38	55659-3819	
31.55	21.25	27.75	31.35	36	55659-3619	
30.3	20	26.5	30.1	34	55659-3419	
29.05	18.75	25.25	28.85	32	55659-3219	
27.8	17.5	24	27.6	30	55659-3019	
26.55	16.25	22.75	26.35	28	55659-2819	
25.3	15	21.5	25.1	26	55659-2619	55659-**19
24.05	13.75	20.25	23.85	24	55659-2419	
22.8	12.5	19	22.6	22	55659-2219	
21.55	11.25	17.75	21.35	20	55659-2019	
20.3	10	16.5	20.1	18	55659-1819	
19.05	8.75	15.25	18.85	16	55659-1619	
17.8	7.5	14	17.6	14	55659-1419	
16.55	6.25	12.75	16.35	12	55659-1219	
15.3	5	11.5	15.1	10	55659-1019	
D	C	B	A	CKT	MATERIAL NO.	MODEL NO.

DWG. NO. SD-55659-004

DO NOT SCALE DRAWING

EC NO.					
DRWN:					
CH'K:					
APPR:					
EC NO.	J2004-4039				
DRWN:	M.NABEI				
CH'K:	K.TOJO				
APPR:	M.SASAO				
REV	0				

新規作成 RELEASED

MATERIAL 材料: SEE CHART
FINISH 仕上げ: —#—
WIRE RANGE 適用電線範囲: —#—
INS. RANGE 被覆外径: —#—
DESCRIPTION

GENERAL TOLERANCES: (UNLESS SPECIFIED) 一般公差

10 UNDER 未満	±0.2
10 OVER 以上 30 UNDER 未満	±0.25
30 OVER 以上	±0.3
ANGLE 角度	±3°

SCALE 4-1
DESIGN UNITS ☒mm ☐INCH
THIRD ANGLE PROJECTION
DIMENSIONS: ☐ mm/INCH ☐ INCH/mm ☒ mm ONLY
SHT REV
REVISE ON CAD ONLY

DRAWN BY & DATE M.NABEI '04/04/28
CHECKED BY & DATE K.TOJO '04/04/28
APPROVED BY & DATE M.SASAO '04/04/28

TITLE:
Mini MiI 2-ROW RELAY WAFER ASS'Y
-LEAD FREE-

molex MOLEX INCORPORATED

CAD FILENAME SD-55659-004.S01
MATERIAL NO. SEE CHART
DRAWING NO. SD-55659-004
SHEET NO. 1 OF 1

THIS DRAWING CONTAINS INFORMATION THAT IS PROPRIETARY TO MOLEX INCORPORATED AND SHOULD NOT BE USED WITHOUT WRITTEN PERMISSION.

SIZE B

SD-55659-004.S01

EN-02J(097) MXJ-54