DRAWING MADE IN THIRD ANGLE PROJECTION

567711 ⇨ 567711

/home/amp16926/DMTECmod

PART NUMBER	REV	FIRST USED
567711	B	852070-1
567711	B	354500-1

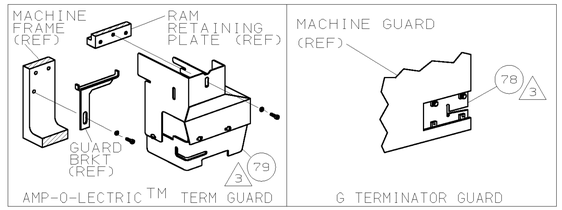

TERMINAL NAME: AMPLIVAR SPLICE, 7 SERRATIONS	
	62040
	964156
TERM APPL SPEC	114-2002

CRIMPING DATA

PAD LTR	CRIMP HEIGHT	MAG WIRE	STRANDED WIRE
A	.082 ±.002	△6	
B	.077 ±.002	△6	
C	.072 ±.002	△6	
D	.066 ±.002	△6	

CRIMP	SIZE	TYPE	RANGE
WIRE	.110	F	25-16 MAG WIRE 18 STRANDED WIRE
INSUL	-	-	-

FEED	APPL INST	SET UP GAGE	LAYOUT
.315	408-8039 & 408-9640	-	L1505

WIRE STRIP LENGTH .275-.341

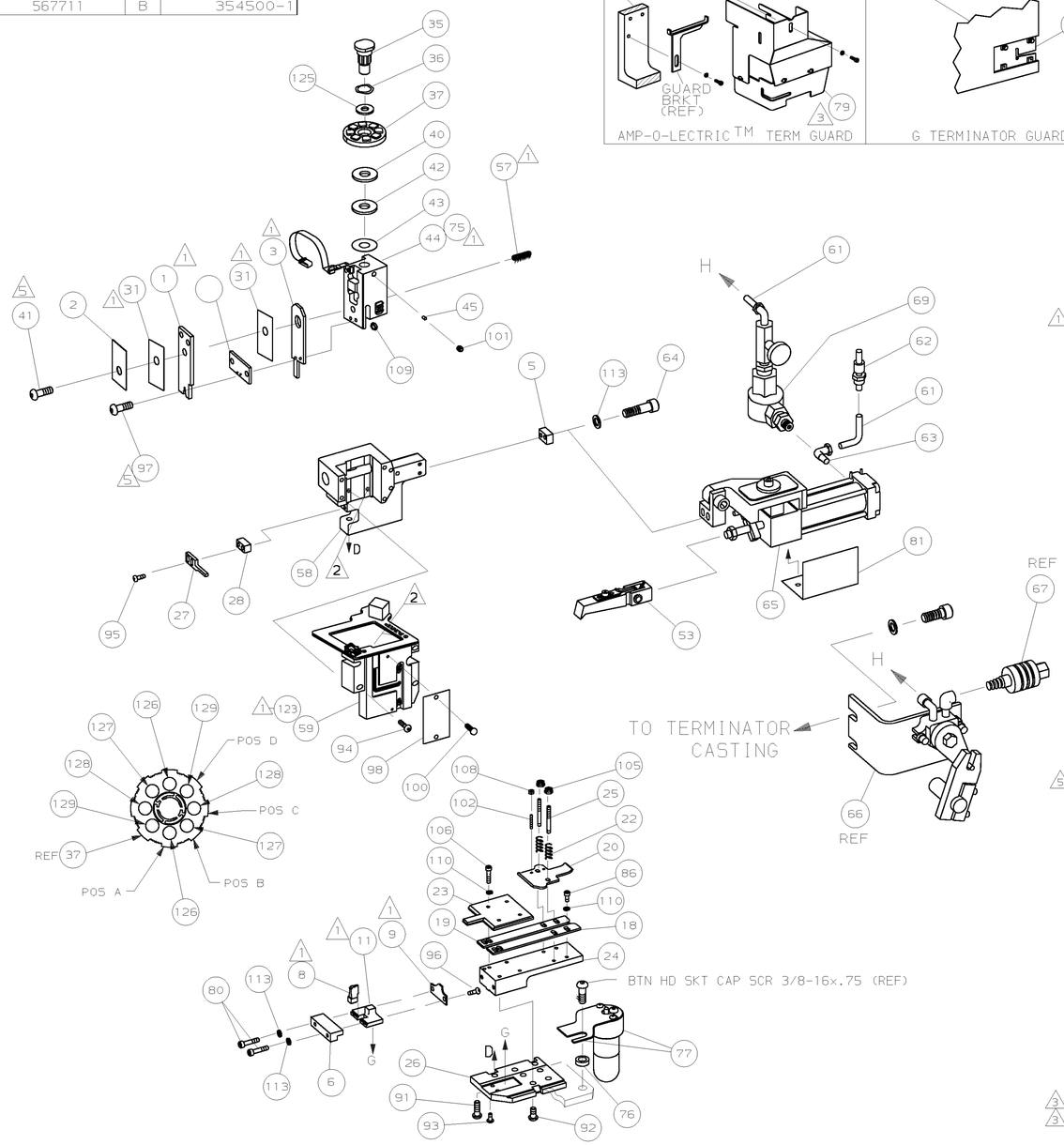

.	2	2	-	C	1-354779-6	PIN, WIRE DISC (.3070)D	129
.	2	2	-	C	354779-2	PIN, WIRE DISC (.3000)C	128
.	2	2	-	C	9-354778-1	PIN, WIRE DISC (.2950)B	127
.	2	2	-	C	8-354778-2	PIN, WIRE DISC (.2905)A	126
.	1	1	-	A	986950-1	WASHER, FLAT PRECISION	125
							124
△1 .	-	-	-	B	856698-1	PCB ASSEMBLY	123
							122
							121
							120
							119
							118
							117
							116
							115
							114
.	4	4	-	A	22260-5	WASHER,LOCK(NO.6)SHEAR PL	113
							112
							111
.	7	7	-	A	21024-4	WASHER,LOCK(NO.8)SHEAR BL	110
.	2	2	-	A	21018-7	NUT,HEX(10-32)RAM	109
.	2	2	-	A	21018-4	NUT,HEX(4-40)DRAG	108
							107
.	4	4	-	A	2-21000-7	SCR,SHC(8-32x.50)STR HOLD DOWN	106
.	2	2	-	A	21022-2	NUT,HEX SL(8-32)DRAG STUD	105
							104
							103
.	2	2	-	A	4-21078-8	SKT SKT SET (4-40x.75)DRAG	102
.	1	1	-	A	21009-2	SCR,SKT SET(1/4-20x.25)RAM	101
.	REF	REF	-	A	1-21002-3	SCR,BHC(4-40x.25)ID PLATE	100
							99
.	1	1	-	B	461264-1	PLATE, IDENTIFICATION	98
△5 .	2	2	-	A	2-21002-9	SCR,BHC(10-32x.75)RAM	97
.	2	2	-	A	1-21002-6	SCR,BHC(6-32x.25)GUIDE PLATE	96
.	2	2	-	A	8-21002-9	SCR,BHC(8-32x1.00)STRIPPER	95
.	4	4	-	A	2-21002-9	SCR,BHC(10-32x.75)CAP	94
.	2	2	-	A	2-22733-0	SCR,BHC(10-32x.38 LW)ANVIL	93
.	4	4	-	A	3-21002-4	SCR,BHC(1/4-20x.62)ST GD PL	92
.	3	3	-	A	2-22733-8	SCR,BHC(1/4-20x.62)H5G	91
							90
							89
							88
							87
.	3	3	-	A	2-21000-6	SCR,SHC(8-32x.38)STRIP GUIDE	86
							85
							84
							83
							82
.	-	1	-	B	460914-1	COVER, FEED CYLINDER	81
.	2	2	-	A	1-21000-9	SCR,SKT CAP(6-32x.38)SH PL	80
△3 .	-	1	-	A	1-455750-4	GUARD ASSY	79
△3 .	REF	-	-	A	679532-1	INSERT, GUARD	78
.	-	1	-	C	465184-9	LUBRICATOR ASSY	77
.	-	1	-	A	454406-1	SPACER, LUB BRACKET	76
△1 .	-	-	-	D	354440-1	FFC LOOP ASSEMBLY	75
							74
							73
.	1	-	-	A	992683-1	SLEEVE, BRASS	72
.	-	1	-	A	22317-3	ELBOW,COPPER TUBE	71

.	-2	-1	U/M	DWG SIZE	PART NO	DESCRIPTION	ITEM NO
					← REVISION OF EACH ASSY NO (WHEN BLANK, USE DWG REVISION)		
QTY REQD PER ASSY					PARTS LIST		

.		.			.	STANDARD FORCE CRIMP QUALITY MONITOR APPLICATOR SIM HDM 466550-1	
-1	BENCH MODEL KII				AIRFEED		
-2	BENCH MODEL G				AIRFEED		
							70
△4 .	-	1	-	C	692655-5	AIR FEED VALVE ASSY	69
							68
.	-	REF	-	A	24042-2	VALVE, SHUT OFF	67
△4 .	-	REF	-	C	692655-6	AIR FEED VALVE ASSY	66
△4 .	1	1	-	B	460277-1	AIR FEED ASSY	65
.	2	2	-	A	4-21000-3	SCR,SHC 10-32x2.00 AIR ASSY	64
.	1	-	-	A	22294-6	ELBOW, TUBING 1/8NPT - 1/4 T	63
.	2	-	-	A	23238-1	QUICK DISCONNECT	62
.	12.00	12.00	IN	A	27319-4	TUBING, POLY-FLO ø.25	61
							60
.	1	1	-	C	768524-1	MODIFIED CAP ASSY	59
.	1	1	-	D	453736-1	HOUSING	58
△1 .	1	1	-	A	7-21013-3	SCR,SET(5/16-24x.38)CR BOLT	57
							56
							55
							54
△4 .	1	1	-	B	460680-7	FEED FINGER ASSY	53
							52
							51
							50
							49
.	-	1	-	C	455350-1	AIR BLAST ASSY	48
							47
							46
.	1	1	-	A	690191-1	PLUG, NYLON	45
.	1	1	-	C	768525-1	END FEED RAM ASSY	44
.	1	1	-	A	690125-1	WASHER, LAMINATED	43
.	1	1	-	A	690124-9	WASHER, RAM	42
△5 .	1	1	-	A	7-21002-9	BOLT, CRIMPER(5/16-24x1.00)	41
.	1	1	-	A	690223-2	SPACER, INSULATION DISC	40
							39
.	1	1	-	B	689446-2	TUBE, AIR BLAST	38
.	1	1	-	D	354777-1	WIRE DISC, PLASTIC	37
.	1	1	-	A	22480-5	WASHER, SPRING	36
.	1	1	-	B	690212-1	POST, RAM	35
							34
							33
							32
△1 .	2	2	-	B	853495-1	GASKET	31
							30
							29
.	1	1	-	B	690451-2	SPACER, STRIPPER	28
.	1	1	-	A	460276-1	STRIPPER	27
.	1	1	-	D	459584-1	PLATE, BASE	26
.	2	2	-	A	22354-8	DRAG, STUD	25
.	1	1	-	B	462931-2	PLATE, STRIP GUIDE	24
.	1	1	-	C	462932-1	PLATE, STRIP HOLD DOWN	23
.	2	2	-	A	4-22281-1	SPRING, DRAG	22
							21
.	1	1	-	A	462925-1	DRAG, STOCK	20
.	1	1	-	B	462929-3	GUIDE, STRIP (REAR)	19
.	1	1	-	C	462930-3	GUIDE, STRIP (FRONT)	18
							17
							16
							15
							14
							13
							12
△1 .	1	1	-	D	459583-1	BODY, ANVIL	11
							10
△1 .	1	1	-	B	459684-1	PLATE, FRONT SHEAR	9
△1 .	1	1	-	D	459582-4	ANVIL	8
△1 .	1	1	-	B	459581-1	BLADE, SLUG	7
.	1	1	-	D	459580-1	HOLD DOWN, TERMINAL	6
.	1	1	-	C	461690-1	SPACER, AIR FEED	5
							4
△1 .	1	1	-	C	768425-1	GUIDE, INSULATION	3
.	1	1	-	B	1-455888-0	SPACER, CRIMPER	2
△1 .	1	1	-	C	459585-1	CRIMPER, WIRE	1

.	-2	-1	U/M	DWG SIZE	PART NO	DESCRIPTION	ITEM NO
					← REVISION OF EACH ASSY NO (WHEN BLANK, USE DWG REVISION)		
QTY REQD PER ASSY					PARTS LIST		

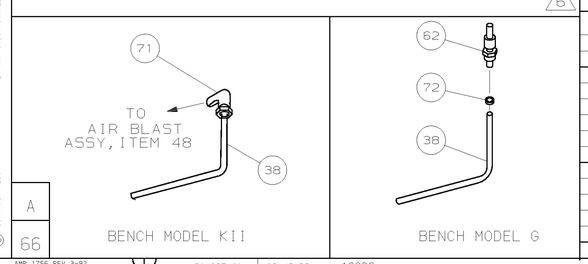

△6 WIRE COMBINATION DATA

PAD LTR	MAG WIRE	STRANDED WIRE
A	(1)20 &	(2)18
A	(1)16 &	(1)18
B	(2)20 &	(1)18
B	(2)21 &	(1)18
B	(1)17 &	(1)18
B	(1)18 &	(1)18
B	(1)19 &	(1)18
B	(2)22 &	(1)18
C	(1)20 &	(1)18
C	(1)21 &	(1)18
C	(1)22 &	(1)18
C	(1)23 &	(1)18
C	(1)24 &	(1)18
D	(1)25 &	(1)18

△1 RECOMMENDED SPARE PARTS.

△2 GREASE LIGHTLY.

△3 GUARD MUST BE IN PLACE WHEN OPERATING APPLICATOR IN A BENCH MACHINE.

△4 SEE DRAWING FOR COMPONENTS

△5 TORQUE ITEMS 41 & 97 TO 60 INCH POUNDS.

P	F	LTR	REVISION RECORD	APP	DATE
		B1	ECN 0150-1103-01	TE	10-01
		B	ECN 0150-5551-94,ADD -2	CE	7-94

DIMENSIONS IN INCHES. DO NOT SCALE PRINT.
TOLERANCES UNLESS OTHERWISE SPECIFIED:
2 PLC DEC ±.25
3 PLC DEC ±-
4 PLC DEC ±-
ANGLES ± -
SURF TEXTURE, √
REMOVE BURRS, BREAK SHARP EDGES R.015 MAX

MATL	HT TR	FIN
-	-	-
-	-	-

DR 7/11/94 M. O'BRINE | APP 7-12-94 T. ELBIN
CHK 7-12-94 C. ERISMAN | REL 9/13/94 B. MORGAN

AMP — AMP Incorporated Harrisburg, PA 17105-3608

NAME END FEED CQM APPLICATOR | MACHINE REF MINI APPL
SCALE - | D | DWG NO 567711 | SHEET 1 OF 1 | REV B1

CAGE CODE 00779 | CUSTOMER AND ASSEMBLY DRAWING | RESTRICTED TO

THIS DRAWING IS A CONTROLLED DOCUMENT.
RELEASED FOR PUBLICATION 30OCT.2001
© COPYRIGHT 2001 BY AMP INCORPORATED. ALL RIGHTS RESERVED.

A 66