THIS DRAWING IS UNPUBLISHED. RELEASED FOR PUBLICATION: -.-.-
© COPYRIGHT - BY TYCO ELECTRONICS CORPORATION. ALL RIGHTS RESERVED.

LOC	ZONE
AA	22

REVISIONS

P	LTR	DESCRIPTION	DATE	DWN	APVD
	G	REV PER EC 0511-01BB-03	8MAR2004	EB	BK

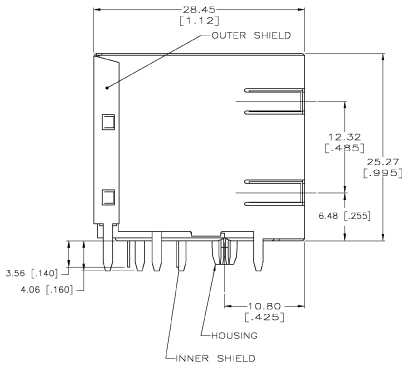

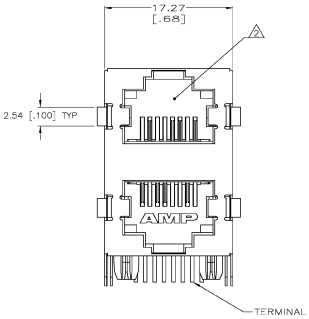

1. MATERIAL:
HOUSING – PCT POLYESTER, BLACK, UL94V-0.
OVERMOLDED TERMINAL ARRAY – PBT, BROWN.
TERMINALS – 0.33 [.013] THICK PHOS BRONZE PLATED WITH 1.27μm [.000050] MIN THICK HARD GOLD IN LOCALIZED AREA AND 3.81μm [.000150] MIN THICK TIN-LEAD IN SOLDER AREA OVER 1.27μm [.000050] MIN THICK NICKEL UNDERPLATE.
SHIELD – 0.25 [.010] THICK COPPER ALLOY PLATED WITH 2.03μm [.000080] MIN TIN-LEAD OVER 2.54μm [.000100] MIN COPPER.

2. JACK CAVITY CONFORMS TO FCC RULES AND REGULATIONS, PART 68 SUBPART F.

3. DATE CODE LOCATED ON REAR OF PART APPROXIMATELY AS SHOWN:
FIRST 2 DIGITS ARE LAST 2 DIGITS OF YEAR,
SECOND 2 DIGITS ARE MANUFACTURING WORK WEEK,
LAST DIGIT IS DAY OF WEEK, WITH SUNDAY = 1.

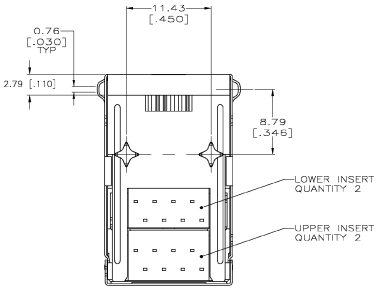

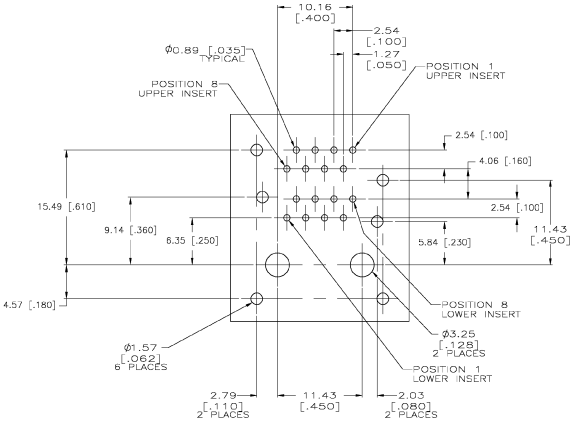

PC BOARD LAYOUT VIEWED FROM COMPONENT SIDE

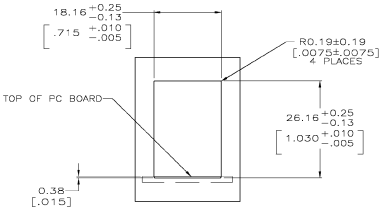

SUGGESTED PANEL CUTOUT DIMENSIONS
SCALE 2:1

569381-1
PART NUMBER

THIS DRAWING IS A CONTROLLED DOCUMENT.	DRN J. SPRINKLE 9-22-99; CHK C. WHITT 8-26-99; APVD L. VARSIK 7-5-99	Tyco Electronics Corporation, Harrisburg, Pa 17105-3608
DIMENSIONS: mm [INCHES]	TOLERANCES UNLESS OTHERWISE SPECIFIED: 0 PLC ± -; 1 PLC ± -; 2 PLC ± 0.25[.01]; 3 PLC ± 0.12[.005]; 4 PLC ± -; ANGLES ± -	PRODUCT SPEC 108-1163-2; APPLICATION SPEC 114-2048; WEIGHT –
MATERIAL 1	FINISH 2	

STACKED MODULAR JACK ASSEMBLY, 2x1 PORT, 8 POSITION, SHIELDED, PANEL GROUND, CATEGORY 5

REV	CAGE CODE	DRAWING NO	RESTRICTED TO
A1	00779	C-569381	–

CUSTOMER DRAWING | SCALE 4:1 | SHEET 1 OF 1 | REV G

AMP 4895 REV 31MAR2000

Downloaded from Elcodis.com electronic components distributor