REV	ECN NO	REVISIONS	DRN	CKD	APP	DATE
A	——	NEW RELEASE	TWC			

OPERATING CHARACTERISTICS AT 25°C AMBIENT						
CHARACTERISTICS		MIN	TYP	MAX	UNITS	TEST CONDITIONS
LUMINOUS INTENSITY	InGaN GREEN		300		mcd	I_F = 10 mA
	InGaN BLUE		80			
FORWARD VOLTAGE	InGaN GREEN		3.3	3.8	V	I_F = 20 mA
	InGaN BLUE					
REVERSE CURRENT	InGaN GREEN			100	µA	V_R = 5 V
	InGaN BLUE					
PEAK WAVELENGTH	InGaN GREEN		522		nm	I_F = 10 mA
	InGaN BLUE		465			
DOMINANT WAVELENGTH	InGaN GREEN		525			I_F = 10 mA
	InGaN BLUE		470			
VIEWING AMGLE	InGaN GREEN		50			2θ1/2
	InGaN BLUE					

ABSOLUTE MAXIMUM RATING AT 25°C AMBIENT			UNITS
POWER DISSIPATION	InGaN GREEN	84	mW
	InGaN BLUE	80	
DERATE LINEARLY FROM 60°C OR HIGHER	InGaN GREEN	0.96	mA/°C
	InGaN BLUE		
CONTINUOUS FORWARD CURRENT	InGaN GREEN	20	mA
	InGaN BLUE		
OPERATING TEMPERATURE	InGaN GREEN	-40 TO 100	°C
	InGaN BLUE		
STORAGE TEMPERATURE	InGaN GREEN	-40 TO 110	°C
	InGaN BLUE		

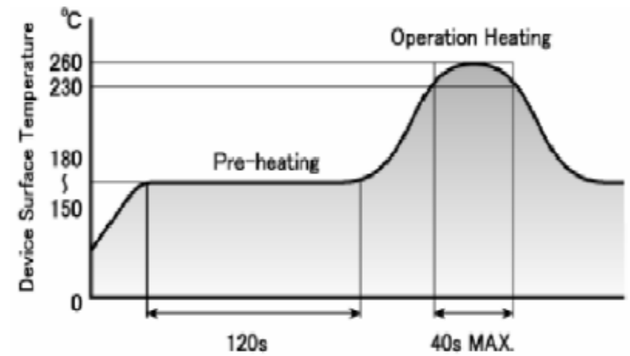

RoHS COMPLIANT REFLOW PROFILE

PART NUMBER	LED COLOR
595-2602-002F	InGaN BLUE
595-2602-007F	
595-2602-013F	
595-2902-002F	InGaN GREEN
595-2902-007F	
595-2902-013F	

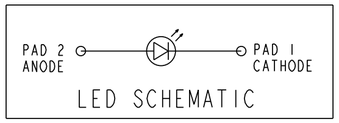

LED SCHEMATIC

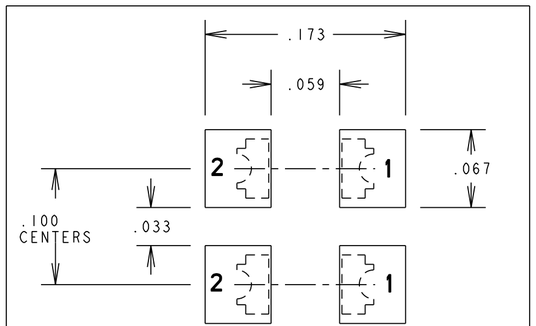

COMPONENT SIDE
RECOMMENDED PC BOARD LAND PATTERN
(DIM'S ±.004)

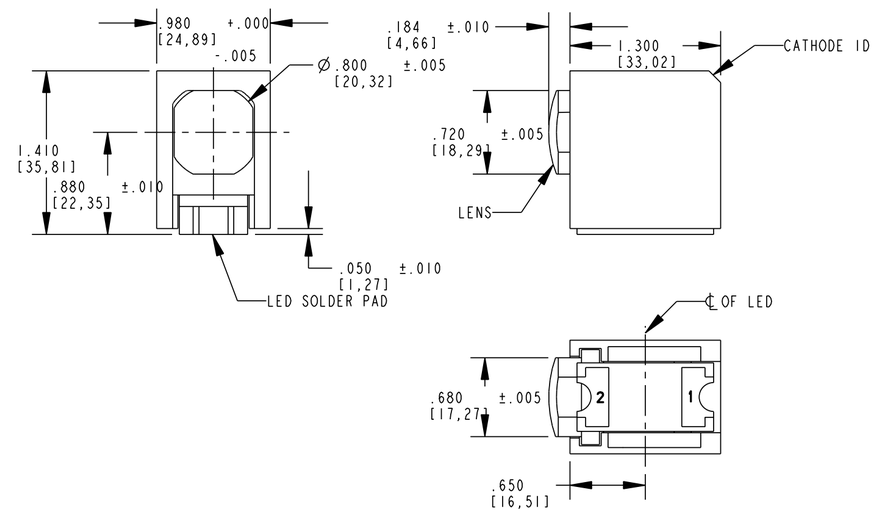

NOTES :

1- MILLIMETER DIMENSIONS SHOWN FOR REFERENCE ONLY
2- PAD NUMBERS ARE FOR REFERENCE ONLY , DESIGNATION NON-EXISTENT ON PART
3- STORAGE CONDITIONS FOR TAPED PRODUCT: RE-TAPING MAY BE NECESSARY FOR PRODUCTS STORED MORE THAN TWELVE MONTHS
4- ORDER QUANTITY IS LED ASSEMBLIES , NOT REELS
5- ...-002F SUFFIX MEANS PARTS ARE PACKED ON A 20 pc SAMPLE STRIP
...-007F SUFFIX MEANS PARTS ARE PACKED ON A 7 INCH REEL , 600 pcs/REEL
...-013F SUFFIX MEANS PARTS ARE PACKED ON A 13 INCH REEL , 2300 pcs/REEL
6- DIALIGHT PART NUMBERS =
7- MOISTURE-SENSITIVE LEVEL 3 AND VACUUM SEALED BAG.
8- PACKAGING ONE HUMIDITY INDICATOR CARD(9100-999-0662-99) PER BAG.
9- THIS ASSEMBLY CONTAINS ELECTROSTATIC DISCHARGE SENSITIVE DEVICES (ESDS). MAINTAIN ALL PRECAUTIONARY MEASURES DURING ASSEMBLY, HANDLING AND STORAGE IN ACCORDANCE WITH IPC-A-610.

TAPING SPECIFICATION

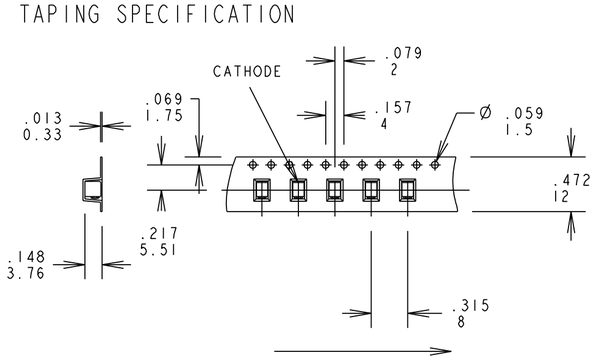

TOLERANCE: .004 UNLESS OTHERWISE SPECIFIED
MILLIMETER DIMENSIONS SHOWN FOR REFERENCE ONLY

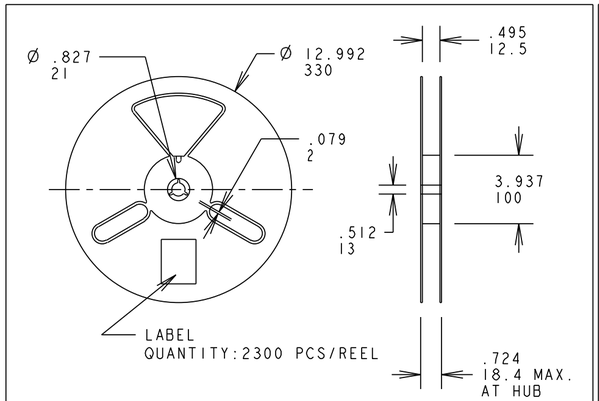

13 INCH DIA. REEL SPECIFICATIONS

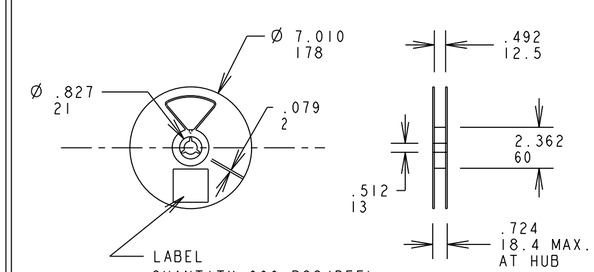

7 INCH DIA. REEL SPECIFICATIONS

RoHS Compliant 595-2X02-0XX Surface Mount LED

Part Numbers with the "F" suffix ending are RoHS Compliant.
Example: 595-2602-013F
The packaging is marked with "RoHS Compliant" label or equivalent markings.
Parts can be wave soldered, dip soldered or hand soldered using typical lead-free soldering process with max 260°C temp. for 5 sec.

THIS DRAWING AND THE CONTENTS HEREIN ARE CONFIDENTIAL AND THE SOLE PROPERTY OF DIALIGHT. REPRODUCTION OF THIS DRAWING OR CONSTRUCTION OF ANY PARTS WITHIN THIS DRAWING ARE FORBIDDEN WITHOUT THE WRITTEN CONSENT OF DIALIGHT.

SCALE: DRAWING SCALE
ALL DIM'S IN: INCHES (MM)
TOLERANCES: UNLESS OTHERWISE SPECIFIED
FRACTIONS: ±1/64
DECIMALS (.XX): ±.01
DECIMALS (.XXX): ±.005
DECIMALS (.XXXX): ±.0005
ANGLES: ±1°
FINISH:
FSCM 83330

DRAWING NUMBER: C-17325
REV: A
TITLE: SURFACE MOUNT CBI RoHS COMPLIANT
MATERIAL:

Dialight
1501 ROUTE 34 SOUTH
FARMINGDALE, NJ 07727

SHEET 1 OF 1
FAMILY TABLE: