MICRO SWITCH
a Honeywell Division
FED. MFG. CODE 91929

SWITCH - ENCLOSED

CATALOG LISTING
604HE162

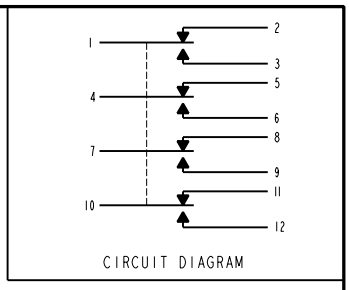

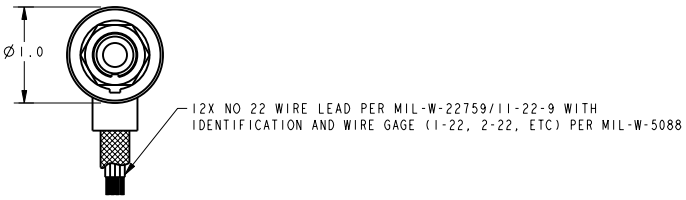

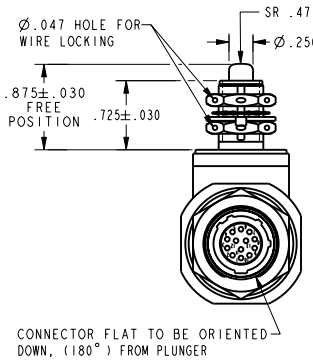

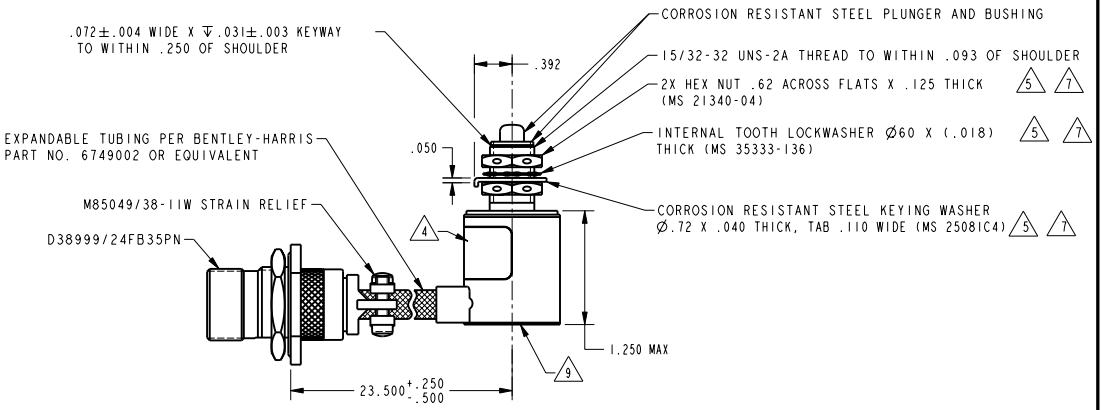

NOTES
1 - CORROSION RESISTANT STEEL ENCLOSURE
2 - SWITCH SEALED PER MIL-PRF-8805 SYMBOL 5
3 - COINCIDENCE OF OPERATING AND RELEASE POINTS: .010 INCH OF PLUNGER TRAVEL
4 CIRCUIT DIAGRAM, CATALOG LISTING, FSCM CODE, TITLE "SWITCH SIDE BRACE ACTUATOR-MAIN LDG", "SCD NO. 7632608501-001" AND "SN XXXX" TO BE SHOWN ON LABEL
5 REPLACEMENT MOUNTING HARDWARE - PACKET 19PA9
6 - OPERATION IN TEMPERATURE RANGE OF -65°F TO +257°F
7 HARDWARE MAY BE PACKAGED UNASSEMBLED PER MIL-PRF-8805
8 GOLD BIFURCATED CONTACTS
9 DATE CODE LABEL PLACED ON BOTTOM PLATE

THIS DRAWING COVERS A PROPRIETARY ITEM AND IS THE PROPERTY OF MICRO SWITCH, A DIVISION OF HONEYWELL. THIS DRAWING IS NOT TO BE COPIED OR USED WITHOUT THE APPROVAL OF MICRO SWITCH

THIRD ANGLE PROJECTION

CHARACTERISTICS	ELECTRICAL DATA	
	CONTACT ARRANGEMENT 4X S P D T 8	
	LOAD	28 VDC SEA LEVEL & 100,000 FT
	RES	1
	IND	.5
	LAMP	.12 @ 5 VDC

CHARACTERISTICS	
OPERATING FORCE	5-12 LB
DIFFERENTIAL FORCE	30 LB MAX
RELEASE FORCE	3 LB MIN
PRETRAVEL	.040 MAX
DIFFERENTIAL TRAVEL	.020 MAX
OVERTRAVEL	.125 MIN
FREE POSITION	

SCALE FULL
DO NOT SCALE PRINT
UNLESS OTHERWISE SPECIFIED TOLERANCES ARE
ONE PLACE (.0) ±.030
TWO PLACE (.00) ±.015
THREE PLACE (.000) ±.005
ANGLES ±
WEIGHT 8 OZ MAX

ANSI Y14.5M-1982 APPLIES

CATALOG LISTING 604HE162
PAGE 1 OF 1
RELEASE NO. PR-21234
REPLACES
ISSUE 4
REVISIONS
A CO-95711 S A V 6 DEC 99
CHECK
6 DEC 99
JAF
DRAWN S A V 6 DEC 99
PTC/CAD 2D

Downloaded from Elcodis.com electronic components distributor