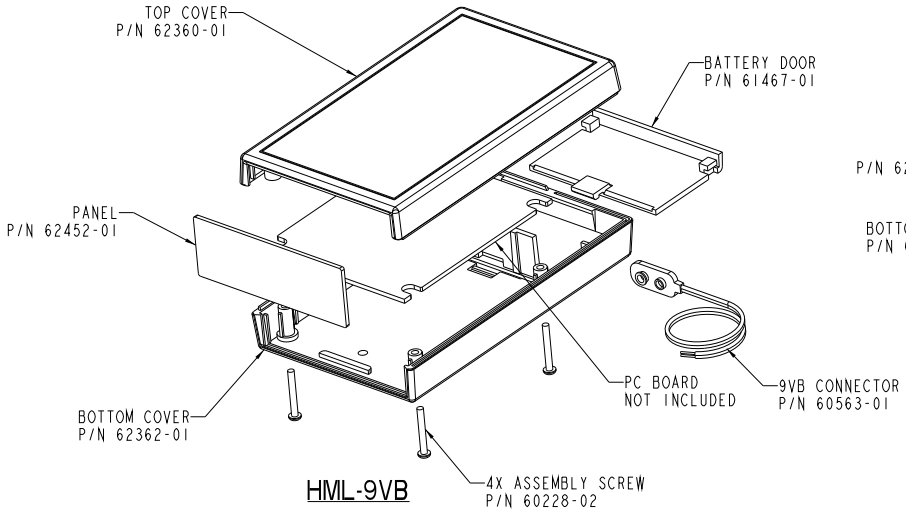

HML-9VB

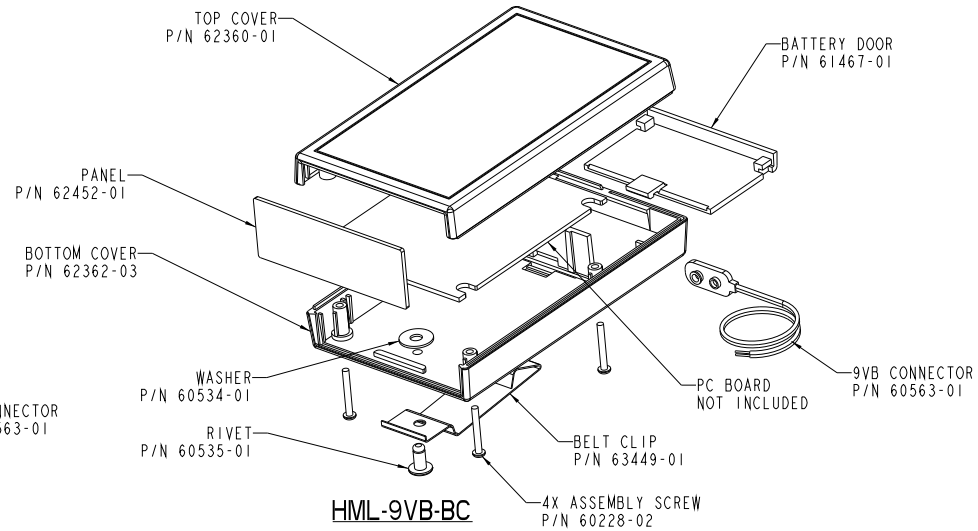

HML-9VB-BC

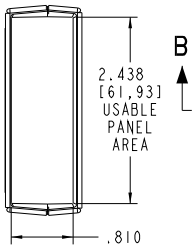

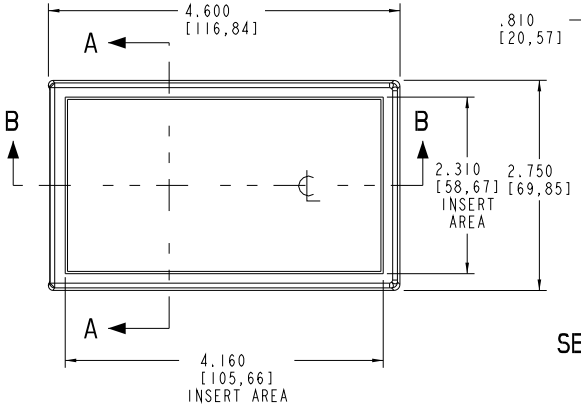

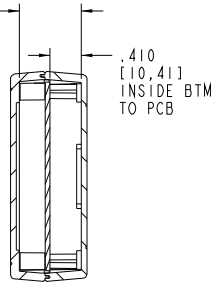

SECTION A-A

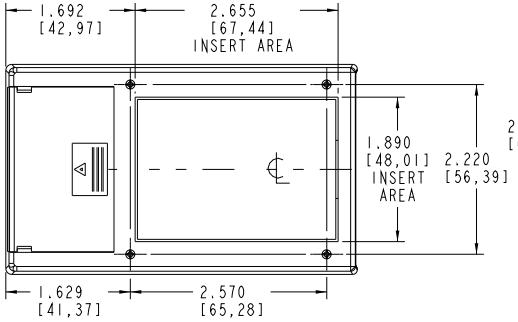

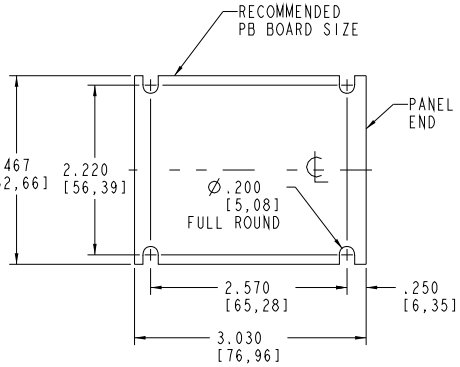

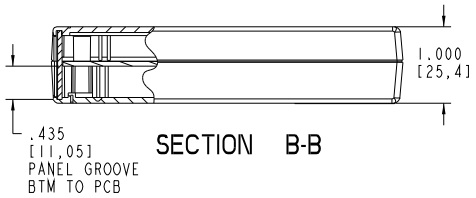

SECTION B-B

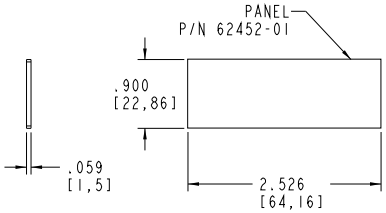

PACTEC®
1-610-361-4200

HML-9VB, HML-9VB-BC

VISIT PACTEC®
ON THE WORLD WIDE WEB
www.pactecenclosures.com

COLOR / MATERIAL CODE		
COLOR	94HB	94V0
BLACK	000	028
P.C.BONE	039	060

DRAWING NUMBER	REV
62456	C