PRODUCT NUMBER	65251-001

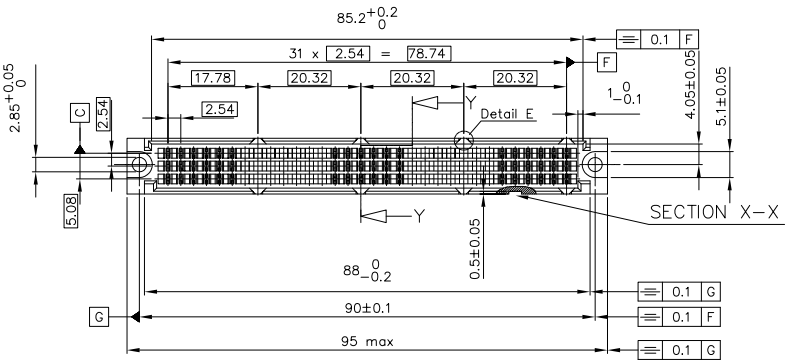

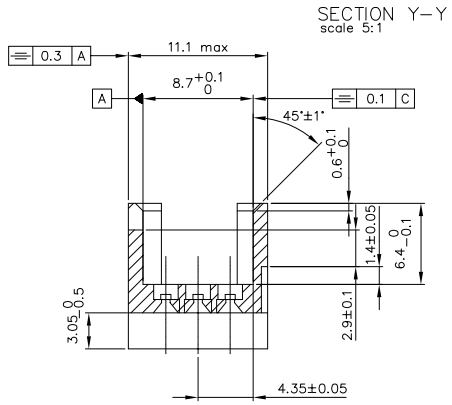

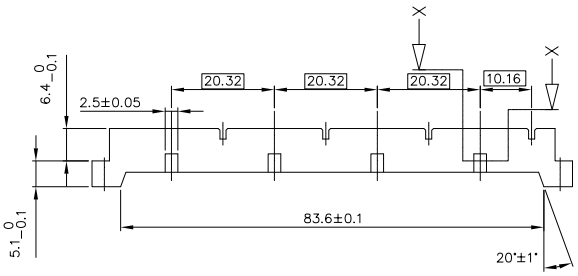

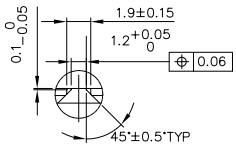

DETAIL E
scale 5:1

Material: Polycarbonate, flame retardant per UL-94-VO,
Colour: grey

NOTES:-

1. THIS PRODUCT MEETS EUROPEAN UNION DIRECTIVES AND OTHER COUNTRY REGULATIONS AS DESCRIBED IN GS-22-008.
2. LEADFREE OR RoHS DIRECTIVE LABELLING TO BE PROVIDED AS PER GS-14-920.
3. " LF " SUFFIX TO PRODUCT NUMBER FOR RoHS COMPATIBLE/ LEADFREE VERSION.
4. PARTS WITH AND WITHOUT "LF " SUFFIX ARE FORM-FIT AND FUNCTIONALLY IDENTICAL. " LF " SUFFIX PROVIDED FOR PART NUMBER STANDARDISATION OF PART THAT MEETS RoHS REQUIREMENTS.

ltr	ecn no	dr	date
C	H30580	MVI	1993-08-18
D	F00406	LLA	2000-05-22
E	I05-0123	MINI	2005-07-27
F	I05-0248	MINI	2005-11-22
G	I06-0068	MINI	2006-06-01

dr	D.LEGRAND	2000-10-09
engr	J.F.NOTTEAU	2000-10-09
chr	RAKHEE GEORGE	2006-06-01
appd	RAKHEE GEORGE	2006-06-01

mat'l. code: SEE NOTE
surface: ISO 1302
tolerance: ISO 406 ISO 1101
tolerances unless otherwise specified: angles, linear
projection
mm
scale 2:1
product family: BACKPANEL
title: SHROUD PRESS FIT
dwg no: 65251
sheet 1 of 1
size: A3
type: Product Customer Drawing
sheet index: revision G, sheet 1

form: A3

PDM: Rev:G STATUS:Released Printed: Sep 24, 2010

FCIconnect.com
Copyright FCI

Downloaded from Elcodis.com electronic components distributor