THIS DRAWING IS UNPUBLISHED. RELEASED FOR PUBLICATION – ,– .
© COPYRIGHT – By – ALL RIGHTS RESERVED.

LOC	DIST
GP	00

REVISIONS

P	LTR	DESCRIPTION	DATE	DWN	APVD
	C	REV PER ECO–11–007678	11MAY2011	RG	DO

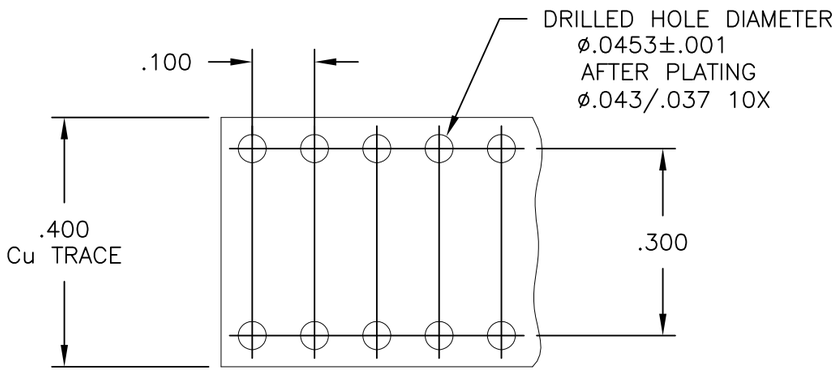

RECOMMENDED FOOTPRINT

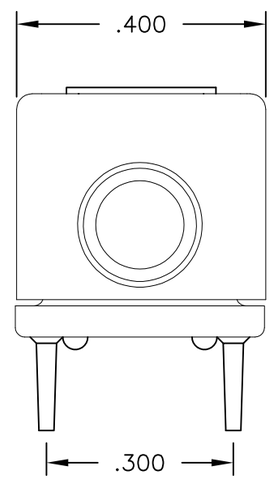

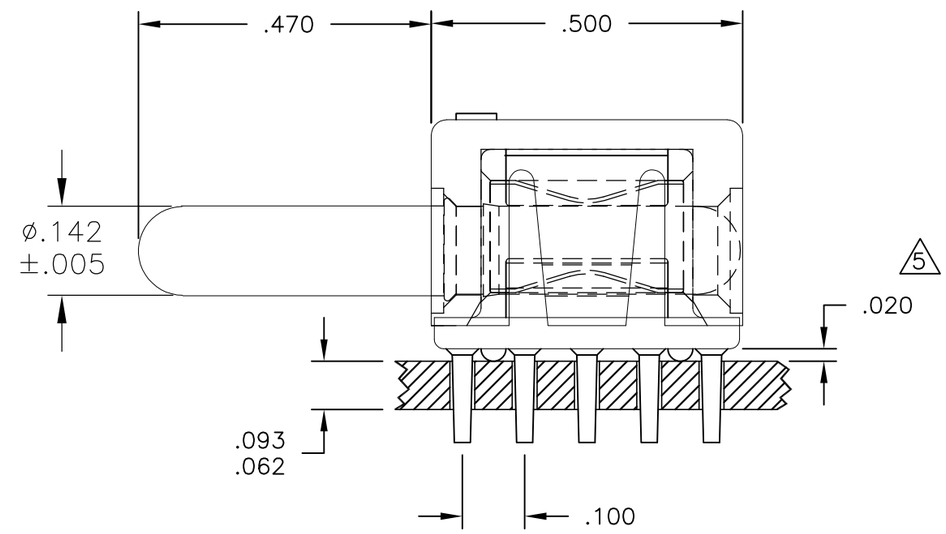

5 A FIVE–POUND (5 lbs) FORCES REQUIRED TO CORRECTLY SEAT THE CONNECTOR WITH PLATED THROUGH HOLES LESS THAN ø.040 INCH.

4. FINISH:
   MODULE – SILVER PLATED .000200 MIN THK. OVER NICKEL .000040 MIN THK.
   CROWN – GOLD PLATED .000030 MIN THK. OVER NICKEL .000040 MIN THK.
   PIN CONTACT – SILVER PLATED .000200 MIN THK. OVER NICKEL .000040 MIN THK.

3. MATERIAL:
   INSULATOR – POLYESTER, GLASS FILLED, UL 94 V–0, COLOR: BLACK
   MODULE – METAL CASTING
   CROWN – BECU
   CONTACT – BRASS

2. ITEMS PROVIDED TO THIS SPECIFICATION SHALL BE IDENTIFIED ON CONTAINER WITH THE FOLLOWING INFORMATION: PART NUMBER AND DATE CODE OF MANUFACTURE.

1. PART NUMBER CHANGES AND.OR DESIGN CHANGES AFFECTING ITEM INTERCHANGEABILITY REQUIRE PRIOR TE APPROVAL AND AUTHORIZATION BY REVISION TO THIS DRAWING.

6643281–1
PART NUMBER

THIS DRAWING IS A CONTROLLED DOCUMENT.

DIMENSIONS: INCHES

TOLERANCES UNLESS OTHERWISE SPECIFIED:
0 PLC ± –
1 PLC ± –
2 PLC ± .02
3 PLC ± .010
4 PLC ± –
ANGLES ± .5

MATERIAL –
FINISH –

DWN ALIM/GRZYBOWSKI 11JAN2011
CHK D.ORRIS –
APVD CHAU/ORRIS 11JAN2011
PRODUCT SPEC –
APPLICATION SPEC –
WEIGHT –

TE Connectivity

NAME
ICCON PIN, PARALLEL
SOLDER, NON–LOCKING STYLE
–

SIZE	CAGE CODE	DRAWING NO	RESTRICTED TO
A3	00779	C–6643281	–

CUSTOMER DRAWING

SCALE	SHEET	REV
4:1	1 OF 1	C