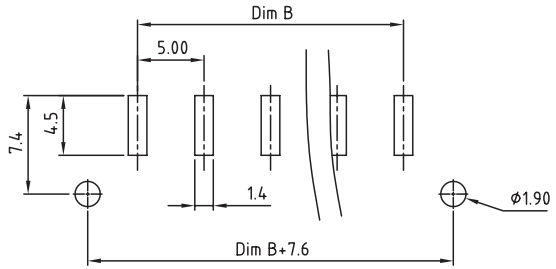


PCB LAYOUT - COMPONENT VIEW

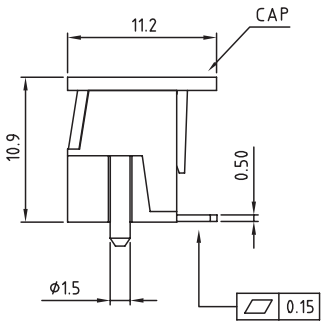


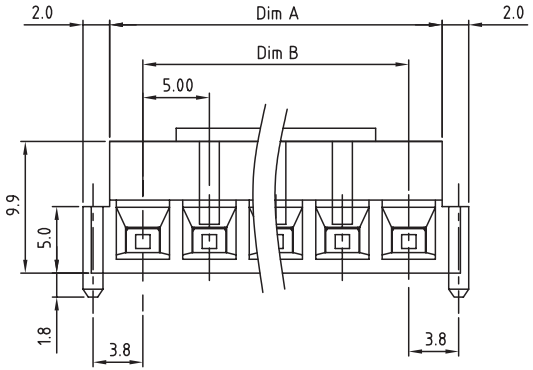


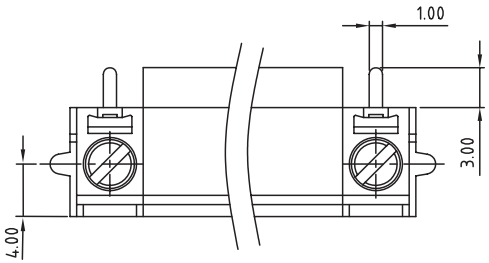


N = Number of poles
Dim A=Nx5.0
Dim B=(N-1)x5.0

| | Dim A | Dim B |
|---|---|---|
| 2-4p | ±0.15 | ±0.10 |
| 5-7p | ±0.20 | ±0.20 |

TECHNICAL CHARACTERISTICS

MATERIAL
INSULATOR: HI TEMP PA46
FLAMABILITY RATING: UL94-V0
COLOR: BLACK
METAL HOUSING: BRASS (CuZn)
TERMINAL SCREW: STEEL ZINC PLATING "-" SLOT TYPE
WIRE GUARD: STAINLESS STEEL
SURFACE OF SOLDER TAIL PLATING: TIN

ENVIRONMENTAL
OPERATING TEMPERATURE: -40 UP TO 130°C
COMPLIANCE: LEAD FREE AND ROHS

| ELECTRICAL | UL |
|---|---|
| CURRENT RATING: | 6 A |
| WORKING VOLTAGE: | 300 VAC |
| WITHSTANDING VOLTAGE: | 1.6 KV |
| CONTACT RESISTANCE: | 20 mOhm MAX |

STANDARD
cULus CERTIFIED E315414

MECHANICAL

| | |
|---|---|
| SOLID WIRE: | 30-14 AWG / 0.05-2.0 MM² |
| STRANDED WIRE: | 30-14 AWG / 0.05-2.0 MM² |
| TORQUE: | 3.5 Lb.In / 0.4 Nm |

WIRE STRIPE LENGTH: 7-8 MM
SCREW: M3
PITCH: 5.0 MM

SOLDERING
JEDEC LEAD FREE REFLOW SOLDERING PROCESS

PACKAGING
TAPE & REEL WITH CAP

RoHS Compliant

| REV | DATE | FILE | BY |
|---|---|---|---|
| G | | | |
| F | | | |
| E | | | |
| D | | | |
| C | 30-MAY-16 | TPK | AK |
| B | 17-AUG-10 | DIMENSION | GG |
| A | 21-JUN-10 | PDF | JP |

PROJECTION:

APPROVAL: FBr

GENERAL TOLERANCE
.X = +/- 0.2
.XX = +/- 0.15

UNIT: MM
SCALE:
SHEET: 1/3
DRAW: MARVIN

WÜRTH ELEKTRONIK

**DESCRIPTION: SERIE 7097 -SMD 5.0MM HORIZONTAL ENTRY MODULAR WITH PRESSURE CLAMP - 2.0MM² WIRES WR-TBL**

**WERI PART NO: 691 709 710 3xx**

SIZE
**A4**

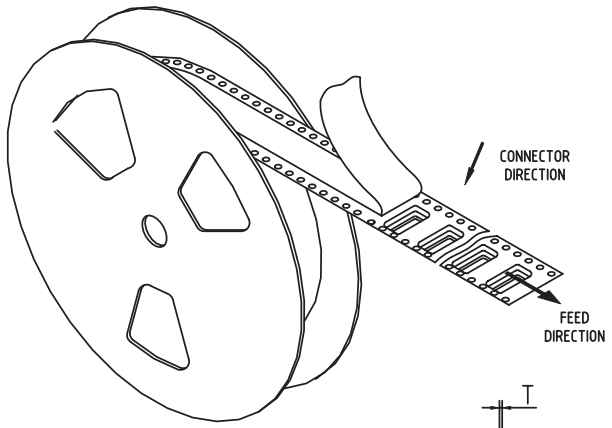


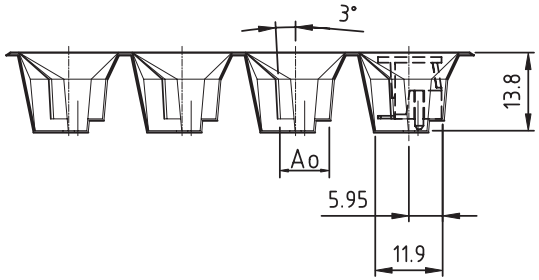


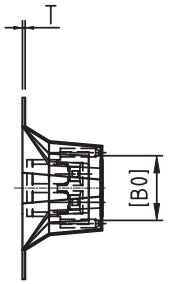


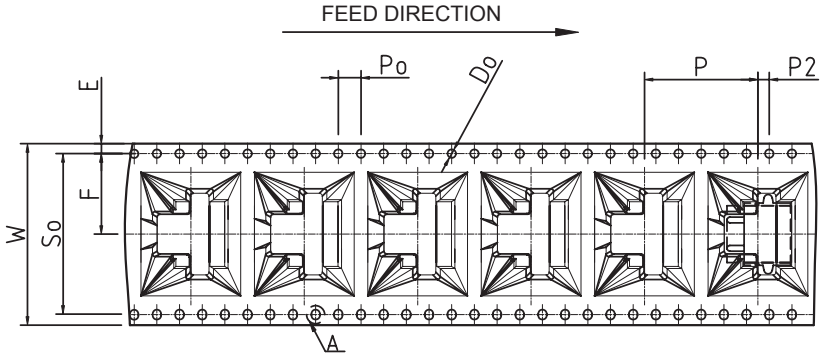


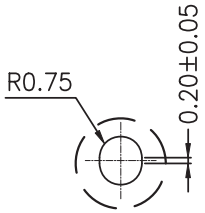


DETAIL: "A"

| EIA DIMENSIONS | |
|---|---|
| W | 32.0±0.3 |
| E | 1.75±0.10 |
| F | 14.2±0.10 |
| So | 28.4±0.10 |
| P | 20.0±0.10 |
| Po | 4.0±0.10 |
| P2 | 2.0±0.10 |
| Do | ø1.5 $^{+0.10}_{-0.00}$ |
| D1 | |
| T | 0.50±0.05 |
| Ao | 8.60±0.10 |
| Bo | 11.40±0.10 |
| Ko | 13.80±0.10 |

RoHS Compliant

| REV | DATE | FILE | BY |
|---|---|---|---|
| G | | | |
| F | | | |
| E | | | |
| D | | | |
| C | | | |
| B | | | |
| A | | | |

PROJECTION:

GENERAL TOLERANCE
.X = +/- 0.2
.XX = +/- 0.15

WÜRTH ELEKTRONIK

APPROVAL: FBr

UNIT: MM
SCALE:
SHEET: 2/3
DRAW: AK

**DESCRIPTION: SERIE 7097 -SMD 5.0MM HORIZONTAL ENTRY MODULAR WITH PRESSURE CLAMP - 2.0MM² WIRES WR-TBL**

**WERI PART NO: 691 709 710 3xx**

SIZE **A4**

## Cautions and Warnings:

This electronic component is designed and developed with the intention for use in general electronics equipments.
Before incorporating the components into any equipments in the field such as aerospace, aviation, nuclear control, submarine, transportation, (automotive control, train control, ship control), transportation signal, disaster prevention, medical, public information network etc. where higher safety and reliability are especially required or if there is possibility of direct damage or injury to human body, Wurth Elektronik must be asked for a written approval.
In addition, even electronic component in general electronic equipments, when used in electrical circuits that require high safety, reliability functions or performance, the sufficient reliability evaluation-check for the safety must be performed before by the user before usage.

RoHS Compliant

| REV | DATE | FILE | BY |
|---|---|---|---|
| G | | | |
| F | | | |
| E | | | |
| D | | | |
| C | | | |
| B | | | |
| A | 10-SEP-14 | PDF | QL |

PROJECTION:

APPROVAL: JC

GENERAL TOLERANCE
.X = +/_ 0.2
.XX = +/_ 0.15

UNIT: MM
SCALE:
SHEET: 3/3
DRAW: QL

WÜRTH ELEKTRONIK

DESCRIPTION: DISCLAIMER

WERI PART NO: DISCLAIMER

SIZE
A4

# Mouser Electronics

Authorized Distributor

Click to View Pricing, Inventory, Delivery & Lifecycle Information:

Wurth Electronics:

691709710305 691709710304 691709710303 691709710306 691709710308 691709710302