THIS DRAWING IS UNPUBLISHED. RELEASED FOR PUBLICATION -,- .
© COPYRIGHT - BY TYCO ELECTRONICS CORPORATION. ALL RIGHTS RESERVED.

LOC	DIST
G	14

REVISIONS

P	LTR	DESCRIPTION	DATE	DWN	APVD
	1	PROPOSED	17NOV05	JR	MJS

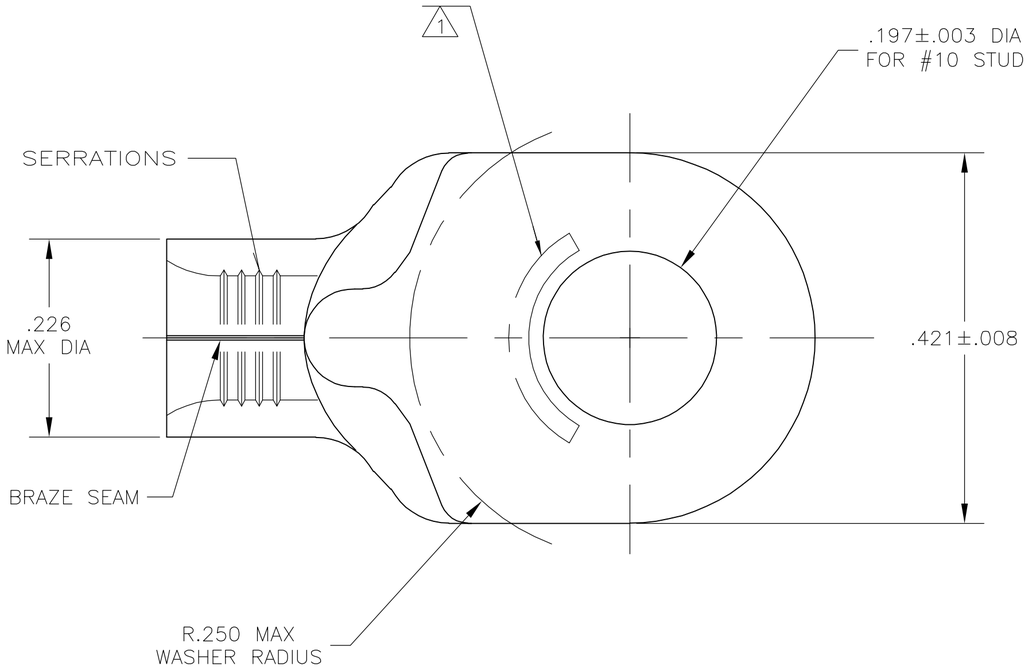

AMP WIRE RANGE	Listed FILE E13288	LR7189 Certified
12–10 AWG SOLID OR STRANDED	N/A	N/A

1. STAMP AMP 12–10* APPROX AS SHOWN
2. COPPER PER ASTM B–152, ANNEALED
3. .000150 MIN TIN PLATE PER ASTM B–545
4. PRELIMINARY – NOT FOR PRODUCTION

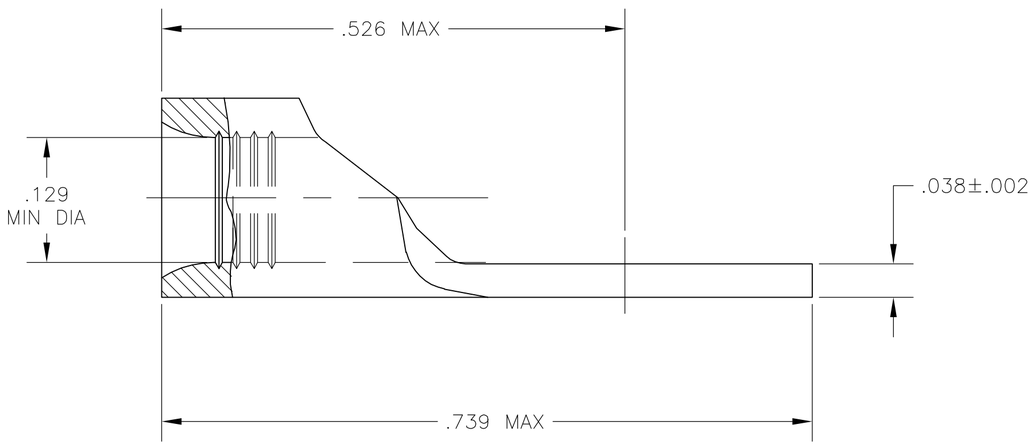

5000	REEL ON TAPE	4 696906–2
QTY	PACKAGING TYPE	PART NO.

AMP INCORPORATED
CUSTOMER SERVICE SYSTEMS

FOR ADDITIONAL PRODUCT INFORMATION OR COPIES OF DRAWINGS AND TECHNICAL DOCUMENTS	PRODUCT INFORMATION CENTER 1–800–522–6752
FOR APPLICATION TOOLING INFORMATION	TOOLING ASSISTANCE CENTER 1–800–722–1111
FOR ORDER ENTRY	1–800–526–5142

MAX RECOMMENDED OPERATING TEMPERATURE: 170°C

VOLTAGE RATING: N/A

CIRCULAR MIL AREA: 2.62–6.64mm² [5,180–13,100] SOLID OR STRANDED

THIS DRAWING IS A CONTROLLED DOCUMENT FOR AMP INCORPORATED. IT IS SUBJECT TO CHANGE AND THE CONTROLLING ENGINEERING ORGANIZATION SHOULD BE CONTACTED FOR THE LATEST REVISION.

THIS DRAWING IS A CONTROLLED DOCUMENT.

DIMENSIONS: INCHES

TOLERANCES UNLESS OTHERWISE SPECIFIED:
0 PLC ± –
1 PLC ± –
2 PLC ± –
3 PLC ± –
4 PLC ± –
ANGLES ± –

MATERIAL – 2

FINISH – 3

DWN jr ruth 17NOV05
CHK MJ SPICER 17NOV05
APVD MJ SPICER 17NOV05 NAME
PRODUCT SPEC —
APPLICATION SPEC —
WEIGHT —

tyco Electronics
Tyco Electronics Corporation
Harrisburg, PA 17105–3608

PRELIMINARY

TERMINAL, RING
TONGUE, SOLISTRAND

SIZE	CAGE CODE	DRAWING NO	RESTRICTED TO
A2	00779	C–696906	—

CUSTOMER DRAWING | SCALE 8:1 | SHEET 1 OF 1 | REV 1

696906

AMP 1471–9 REV 31MAR2000