THIS DRAWING IS UNPUBLISHED. RELEASED FOR PUBLICATION -.- .
© COPYRIGHT - BY TYCO ELECTRONICS CORPORATION. ALL RIGHTS RESERVED.

PART NUMBER	REV	FIRST USED	MACHINE REFERENCE	FEED TYPE
566428-1	F	356462-2	G-SPLICE TERM	AIR FEED
566428-2	G	2161300-1	5K CE & GII THRU SPLICE	AIR FEED
7-566428-7	E	356462-2	SPARE PARTS KIT	-
7-566428-8	G	-	CONV. KIT FOR -1 TO -2	-

TERMINAL NAME: SPLICE

1217990
63561

CRIMPING DATA

PAD NO.	CRIMP HEIGHT	WIRE SIZE	WIRE SET UP
6	.109 ±.002 [2.77 ±0.05mm]	8,000 CMA	(5)18 △6
6	.131 ±.002 [3.33 ±0.05mm]	13,000 CMA	(2)12 △6
-	-	-	-
-	-	-	-
-	-	-	-
-	-	-	-
-	-	-	-
-	-	-	-

CRIMP	SIZE	TYPE	RANGE
WIRE	.180 [4.57mm]	F	6,000-14,000 CMA
INSUL	-	-	-

WIRE STRIP LENGTH	TERM APPL SPEC	FEED	APPL INSTRUCTION	SET UP GAGE	LAYOUT
.310-.350	114-2088	.630	408-8318(-1) 408-127000(-2)	-	12289

LOC	DIST
A	66

REVISIONS

P	LTR	DESCRIPTION	DATE	DWN	APVD
	G	ECR-15-012133	8-2015	RS	UG

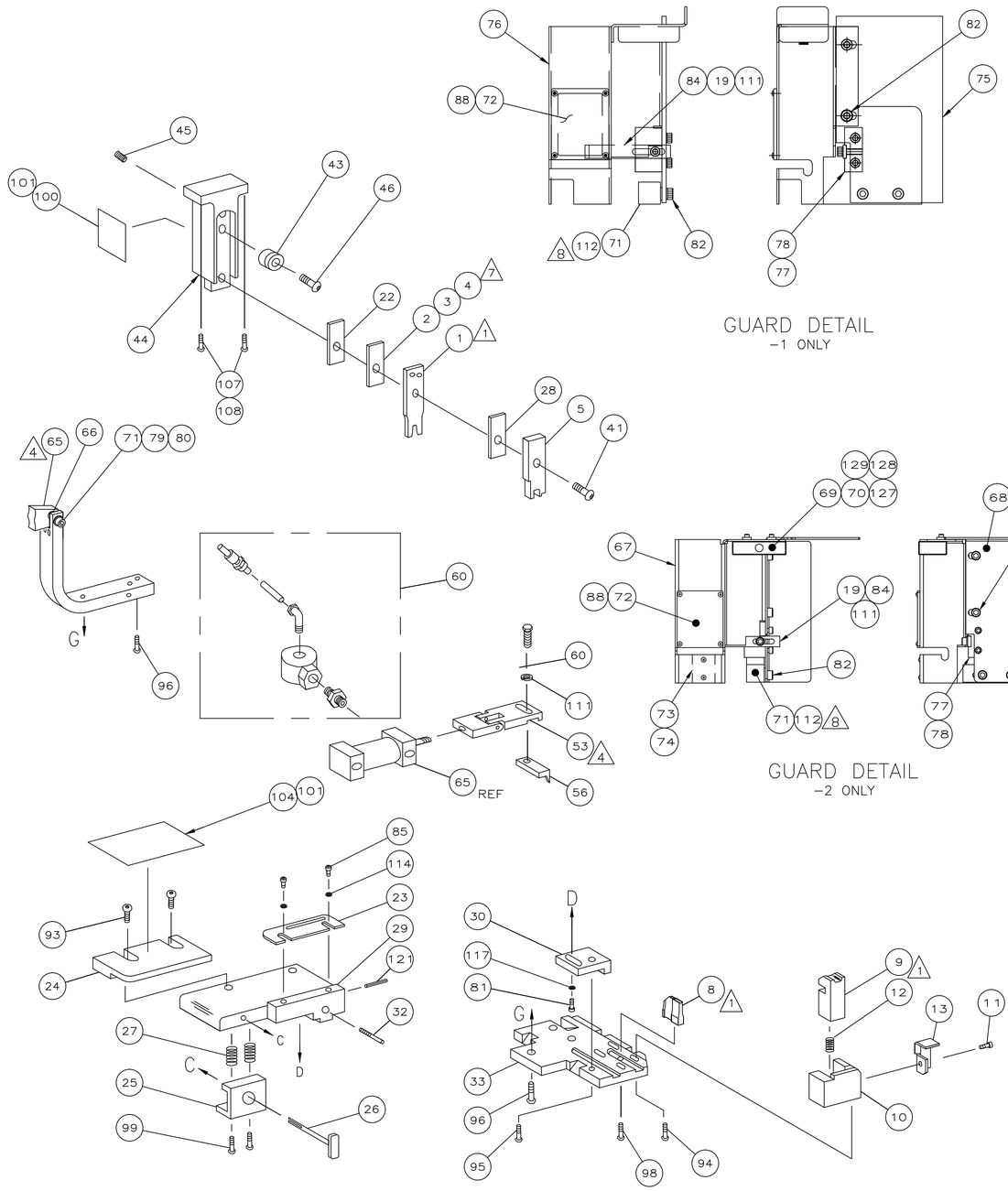

QTY REQD PER ASSY -78	-77	-2	-1	PART NO	DESCRIPTION	ITEM NO
2	-	2	-	18029-2	M4 HEX NUT	129
2	-	2	-	18025-2	M4 LOCK WASHER	128
2	-	2	-	18027-2	M4 FLAT WASHER	127
1	-	1	-	408-32162	THRU SPLICE IS SHEET-GII	126
-	-	1	-	408-127000	THRU SPLICE IS SHEET	125
-	-	1	1	217238-1	GENERAL INSTRUCTION PACKAGE	124
-	-	-	1	408-8318	THRU SPLICE IS SHEET	123
						122
-	-	1	1	4-21028-0	PIN,SLT SPR(Ø.093x.75)ST GDE PL	121
						120
						119
						118
-	-	1	1	21024-5	WASHER, LOCK(#10)ADJ BLOCK	117
						116
						115
-	-	2	2	21024-2	WASHER,LOCK(#4)FRONT STP GUIDE	114
						113
△8 -	-	AR	AR	21899-2	WASHER, FLAT (#10)	112
-	-	2	2	21024-4	WASHER,LOCK(#8)STRIPPER	111
						110
						109
2	-	2	-	3-18023-3	SCR,SHC (M6 X 50)	108
-	-	-	2	3-18023-1	SCR, SHC (M6x30)	107
						106
△5 -	-	REF	REF	1490705-1	KIT, WIRE SHELF	105
-	-	1	1	690701-2	I.D. STRIP GUIDE	104
-	-	-	-	-	-	103
						102
-	-	AR	AR	982057-2	TAPE, POLYURETHANE FOAM	101
-	-	1	1	819347-1	I.D. RAM	100
-	-	2	2	3-21002-0	SCR,BHC(10-32x.88)DRAG	99
-	-	1	1	22733-8	SCR,BHC(8-32x.38 LW)ANVIL	98
-	-	-	-	-	-	97
-	-	2	2	2-22733-8	SCR,BHC(1/4-20x.62)HSG	96
-	-	1	1	2-21002-7	SCR,BHC(10-32x.50)SG ADJ BLK	95
-	-	2	2	2-21002-2	SCR,BHC(8-32x.50)TERM H DWN	94
-	-	2	2	2-21002-3	SCR,BHC(8-32x.62)HOLDER	93
						92
						91
						90
						89
-	-	4	4	1-21002-0	SCR,BHC(2-56X.25)	88
						87
-	-	1	1	2-22603-1	SCR,HEX HD(8-32x.38)FEED FINGER	86
-	-	2	2	1-21000-3	SCR,SHC(4-40x.25)F ST GUIDE	85
-	-	1	1	2-21000-7	SCR,SHC(8-32x.50)STRIPPER	84
						83
-	-	4	4	3-21000-4	SCR,SHC(10-32x.38)GUARD	82
-	-	1	1	3-22603-1	SCR, HEX (10-32X.38)SG ADJ BL	81
-	-	1	1	3-21001-5	SCR, SHC 3/8-16x1.00	80
-	-	1	1	21024-8	WASHER, FLAT 3/8	79
-	-	1	1	1338118-1	MOUNT, STRIPPER	78
-	-	2	2	1-21000-9	SCR, SHC 6-32x.38	77
-	-	-	1	1338175-4	GUARD	76
-	-	-	1	1338176-1	GUARD, EXTENSION	75
-	-	1	1	1338177-1	DEFLECTOR	74
-	-	2	2	21002-9	SCR,BHC(2-56 x .19)DEFL	73
-	-	1	1	1338174-1	WINDOW, GUARD	72
-	-	1	1	1338116-1	BRACKET, FEED	71

PARTS LIST

QTY REQD PER ASSY -78	-77	-2	-1	PART NO	DESCRIPTION	ITEM NO
2	-	2	-	1-18023-3	SCR, SHC, M4 X 16	70
1	-	1	-	2168489-1	ACTUATOR, SPARE MC1	69
1	-	1	-	2161461-1	GUARD, EXTENSION	68
1	-	1	-	2161460-4	GUARD	67
-	-	1	1	371178	BASE MOUNT WASHER	66
△4 -	-	1	1	461065-1	AIR FEED ASSY (1 INCH)	65
						64
						63
						62
						61
-	-	1	1	692655-7	AIR FEED VALVE	60
						59
						58
						57
-	-	1	1	1-694433-6	PAWL, FEED	56
						55
						54
△4 -	-	1	1	461062-1	FEED FINGER ASSY	53
						52
						51
						50
						49
						48
						47
-	-	1	1	21004-9	SCR,SHC(.31 X .50)WHEEL ADJ	46
-	-	1	1	27058-2	BALL PLUNGER	45
-	-	1	1	1338117-1	TOOL HOLDER ASSY	44
-	-	1	1	1338124-1	WHEEL, ADJ	43
						42
-	-	1	1	7-21002-8	BOLT, CRIMPER(5/16x.87)	41
						40
						39
-	-	-	-	-	-	38
-	-	-	-	-	-	37
△5 -	-	2	2	18027-4	WASHER, FLAT M6	36
-	-	2	2	2-18023-9	SCR, SHC M6x20	35
						34
-	-	1	1	A2 1752990-1	PLATE, BASE	33
-	-	1	1	690432-3	SCREW, ADJUSTMENT	32
						31
-	-	1	1	455689-1	BLOCK, STRIP GUIDE ADJ	30
-	-	1	1	455671-1	PLATE, STRIP GUIDE	29
-	-	1	1	1-455888-4	SPACER, FRONT SHEAR DEP	28
-	-	2	2	22284-1	SPRING, DRAG	27
-	-	1	1	690546-1	LEVER, DRAG RELEASE	26
-	-	1	1	240792-1	DRAG, TERMINAL	25
-	-	1	1	6-690440-8	GUIDE, STRIP (REAR)	24
-	-	1	1	690438-1	GUIDE, STRIP (FRONT)	23
-	-	1	1	1338200-5	SPACER, WIRE CRIMPER	22
						21
						20
-	-	1	1	1-690472-6	STRIPPER	19
						18
-	-	-	-	-	-	17
-	-	-	-	-	-	16
						15
						14
-	-	1	1	1752988-1	CHIP GUARD	13
-	-	1	1	4-22280-9	SPRING, SHEAR	12
-	-	1	1	690461-3	STOP, SHEAR	11
-	-	1	1	1-690459-0	HOLDER, SHEAR (FRONT)	10
△1 -	1	1	1	454276-5	SHEAR, FLOAT (FRONT)	9
-	1	1	1	1633102-1	ANVIL	8
						7
						6
-	-	1	1	1338126-4	DEPRESSOR, SHEAR (FRONT)	5
-	-	1	1	1338200-3	SPACER	4
△7 -	-	1	1	1338200-2	SPACER	3
-	-	1	1	1338200-1	SPACER	2
△1 -	1	1	1	1338125-9	CRIMPER, WIRE	1

PARTS LIST

OBSOLETE NOT the LATEST REVISION

△1 RECOMMENDED SPARE PARTS.
△2 GREASE LIGHTLY.
△3 GUARD MUST BE IN PLACE WHEN OPERATING APPLICATOR IN A BENCH MACHINE.
△4 SEE DRAWING FOR COMPONENTS
△5 ITEM NOT SHOWN
△6 WIRE COMBINATION FOR SET-UP ONLY. SEE TERMINAL CUSTOMER DRAWING FOR WIRE RANGE AND CRIMP HEIGHTS.
△7 INSTALL ITEMS 2,3 & 4 AS REQUIRED REMAINING ITEMS TO STAY WITH APPLICATOR.
△8 PLACE ITEM 112 BETWEEN ITEM 71 AND 75 ON -1. PLACE ITEM 112 BETWEEN ITEM 71 AND 68 ON -2.

THIS DRAWING IS A CONTROLLED DOCUMENT.

DIMENSIONS: INCHES

TOLERANCES UNLESS OTHERWISE SPECIFIED:
0 PLC ± -
1 PLC ± -
2 PLC ± .25
3 PLC ± -
4 PLC ± -
ANGLES ± -

MATERIAL -
FINISH -

DWN C.ERISMAN 040CT99
CHK C. ERISMAN 040CT99
APVD T.ELBIN 040CT99
PRODUCT SPEC -
APPLICATION SPEC -
WEIGHT -

TE CONNECTIVITY
Harrisburg, PA 17105-3608

NAME SIDE FEED THRU SPLICE APPLICATOR
-
-

SIZE	CAGE CODE	DRAWING NO	RESTRICTED TO
A1	00779	C-566428	-

CUSTOMER DRAWING SCALE - SHEET 1 OF 1 REV G

AMP 4805 REV 31MAR2000