EDA35 SERIES

ENGLISH

AC-DC Enclosed switching power supply

AC-DC ENCLOSED SWITCHING POWER SUPPLY

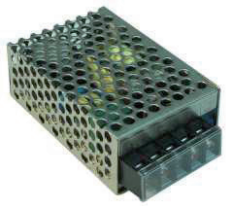

FEATURES

- UL / cUL / TUV / CE
- UNIVERSAL INPUT 88~264VAC
- SHORT CIRCUIT PROTECTION
- INTERNAL INPUT FILTER
- 2 YEARS WARRANTY
- HIGH EFFICIENCY UP TO 87%
- HIGH AVERAGE EFFICIENCY MEET EUP
- LOW STANDBY POWER CONSUMPTION

UL 60950-1 EN 60950-1

MODEL LIST

MODEL NO.	INPUT VOLTAGE	OUTPUT WATTAGE	OUTPUT VOLTAGE	OUTPUT CURRENT	EFF. (min.)	EFF. (typ.)	EFF. (avg.)
Single Output Models							
EDA35-05	88~264 VAC	30 WATTS	+ 5 VDC	6000 mA	80%	82%	82%
EDA35-12	88~264 VAC	36 WATTS	+ 12 VDC	3000 mA	84%	86%	85%
EDA35-15	88~264 VAC	36 WATTS	+ 15 VDC	2400 mA	85%	87%	85%
EDA35-24	88~264 VAC	36 WATTS	+ 24 VDC	1500 mA	85%	87%	85%

SPECIFICATION

All Specifications Typical At Nominal Line, Full Load, 25°C Unless Otherwise Noticed

GENERAL

Characteristics	Conditions		min.	typ.	max.	unit
Switching frequency	Vi nom, Io nom			65		KHz
Isolation voltage	Input-Output		3000 / 4242			VAC / VDC
	Input-FG		1500 / 2121			VAC / VDC
Isolation resistance	Input-Output, @ 500VDC		100			MΩ
Ambient temperature	Operating at Vi nom		-40		+ 71	°C
Derating (see derating curve)	Vi nom, from +56°C to +71°C				2.5	% / °C
Storage temperature	Non operational		-40		+ 85	°C
Relative humidity	Vi nom, Io nom		20		95	% RH
Temperature coefficient	Vi nom, Io min				± 0.03	% / °C
MTBF	Bellcore Issue 6 @40°C, GB	5V model		666000		Hours
		12V model		695000		Hours
		15V model		712000		Hours
		24V model		716000		Hours
Altitude during operation	IEC 60068-2-13				4850	m
Dimension	Body size		L78 x W51 x D28			mm
Cooling	Free air convection					

RS, Professionally Approved Products, gives you professional quality parts across all products categories. Our range has been testified by engineers as giving comparable quality to that of the leading brands without paying a premium price.

EDA35 SERIES

ENGLISH

SPECIFICATION

All Specifications Typical At Nominal Line, Full Load, 25°C Unless Otherwise Noticed

INPUT SPECIFICATIONS

Characteristics	Conditions		min.	typ.	max.	unit
Rated input voltage	Io nom		100		240	VAC
Absolute input max. range		AC in	88		264	VAC
		DC in	120		375	VDC
Input current	Vi : 115 / 230 VAC, Io nom			620 / 400		mA
Rated input current	Vi : 88 VAC, Io nom				800	mA
Line frequency	Vi nom, Io nom		47		63	Hz
Inrush current	Vi : 115 / 230 VAC , Io nom				20 / 40	A
Power dissipation	Vi : 230 VAC, Io nom	5V model		8		W
		12V model		7		W
		15V model		6.5		W
		24V model		6.5		W
Leakage current	Input-Output				0.25	mA
	Input-FG				3.5	mA
Standby power consumption	Vi nom, Io=0A				0.3	W

OUTPUT SPECIFICATIONS

Characteristics	Conditions		min.	typ.	max.	unit
Output voltage accuracy (Adjusted before shipment)	Vi nom, Io max		0		+ 1	%
Minimum load	Vi nom		0			%
Line regulation	Io nom, Vi min ...Vi max				± 0.5	%
Load regulation	Vi nom, Io min ...Io nom				± 1	%
Voltage trim range	Vi nom, 0.8 Io nom	5V model	4.5		5.5	VDC
		12V model	10.8		13.2	VDC
		15V model	13.5		16.5	VDC
		24V model	21.6		27.6	VDC
Rated continuous loading	Vi nom	5V model	6 A @ 5Vdc / 5.4 A @ 5.5 Vdc			
		12V model	3 A @ 12Vdc / 2.7 A @ 13.2 Vdc			
		15V model	2.4 A @ 15Vdc / 2.1 A @ 16.5 Vdc			
		24V model	1.5 A @ 24Vdc / 1.3 A @ 27.6 Vdc			
Hold up time	Vi : 115 / 230 VAC , Io nom		10 / 50			ms
Turn on time	Vi nom, Io nom				1000	ms
	Vi nom, Io nom → with 3500 μF CAP				1500	ms
Rise time	Vi nom, Io nom				150	ms
	Vi nom, Io nom → with 3500 μF CAP				500	ms
Fall time	Vi nom, Io nom				150	ms
Transient recovery time	Vi nom, 1~0.5 Io nom				2	ms
Ripple & noise	Vi nom, Io nom, BW = 20MHz				100	mV
Power back immunity	Vi nom, Io nom 1 second	5V model	7.5			VDC
		12V model	18			VDC
		15V model	22			VDC
		24V model	35			VDC
Capacitor load	Vi nom, Io nom				3500	μF
Efficiency	Vi nom, Io nom, Po / Pi		Up to 87%, See model list and typ efficiency curve			

CONTROL AND PROTECTION

Characteristics	Conditions	min.	typ.	max.	unit
Input fuse		T2A / 250VAC internal			
Internal surge voltage protection	IEC 61000-4-5	Varistor			
Rated over load protection	Vi nom (see typ current limited curve)	110		170	%

RS, Professionally Approved Products, gives you professional quality parts across all products categories. Our range has been testified by engineers as giving comparable quality to that of the leading brands without paying a premium price.

EDA35 SERIES

ENGLISH

SPECIFICATION

All Specifications Typical At Nominal Line, Full Load, 25°C Unless Otherwise Noticed

CONTROL AND PROTECTION

Characteristics	Conditions		min.	typ.	max.	unit
Over voltage protection	Vi nom, Io nom (Auto Recovery)	5V model	5.75		6.75	VDC
		12V model	13.8		16.2	VDC
		15V model	17.25		20.25	VDC
		24V model	28.8		32.4	VDC
Output short circuit			Hiccup mode			

APPROVALS AND STANDARDS

UL / cUL	UL 60950-1 Recognized
TUV	EN 60950-1, CB scheme
CE	EN 61000-6-3, EN 55022 Class B, EN 61000-3-2, EN 61000-3-3, EN 61000-6-2, EN 55024 EN 61000-4-2, EN 61000-4-3, EN 61000-4-4, EN 61000-4-5, EN 61000-4-6, EN 61000-4-8 EN 61000-4-11, ENV 50204, EN 61204-3
Vibration resistance	meet IEC 60068-2-6 (10-500 Hz, 2G, along X, Y, Z each Axis, 60 min for each Axis)
Shock resistance	meet IEC 60068-2-27 (15G, 11ms, 3 Axis, 6 Faces, 3 times for each Face)

PHYSICAL CHARACTERISTICS

Case size	78 x 51 x 28 mm (3.07 x 2 x 1.1 inches) (body size)
Case material	Metal
Weight	180 g

MECHANISM & PIN CONFIGURATION

mm [inch]

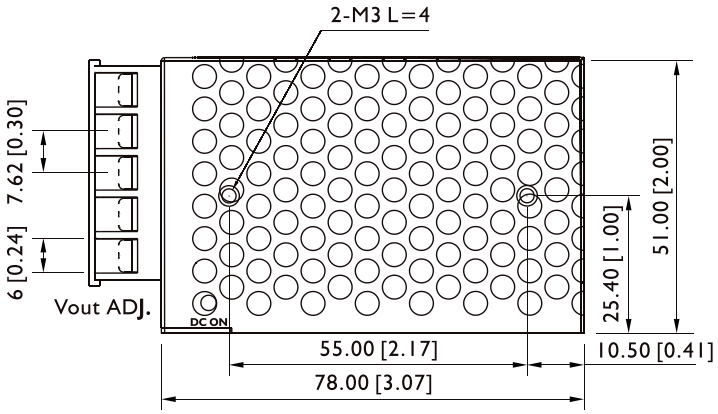

INSTALLATION

Ventilation / Cooling
Normal convection
Connector size range
AWG22-14 (0.2~2mm^2) flexible / solid cable, connector can withstand torque at maximum 8 pound-inches.

GENERAL TOLERANCE	
0.00[0.00] - 30.00[1.18]	±0.30[0.01]
30.00[1.18] - 120.00[4.72]	±0.50[0.02]

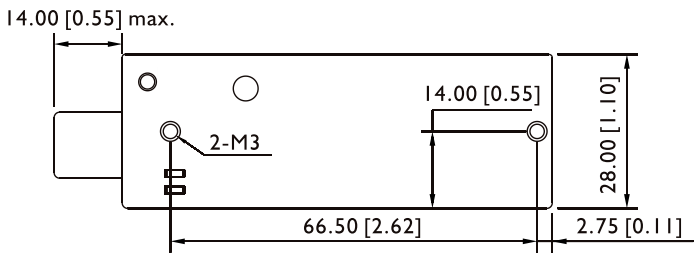

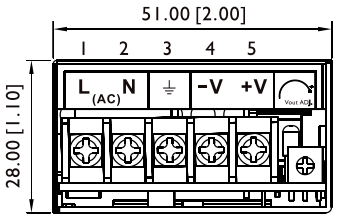

RS, Professionally Approved Products, gives you professional quality parts across all products categories. Our range has been testified by engineers as giving comparable quality to that of the leading brands without paying a premium price.

EDA35 SERIES

ENGLISH

PIN ASSIGNMENT

PIN NO.	Designation		Description
1	IN	L	Input terminals (phase conductor, no polarity at DC input)
2	IN	N	Input terminals (neutral conductor, no polarity at DC input)
3	IN	⏚	Ground this terminal to minimize high-frequency emissions
4	OUT	−	Negative output terminal
5	OUT	+	Positive output terminal
	OTHER	Vout ADJ.	Trimmer-potentiometer for Vout adjustment
	OTHER	DC ON	Operation indicator LED

CIRCUIT SCHEMATIC

• Block diagram for EDA35 series

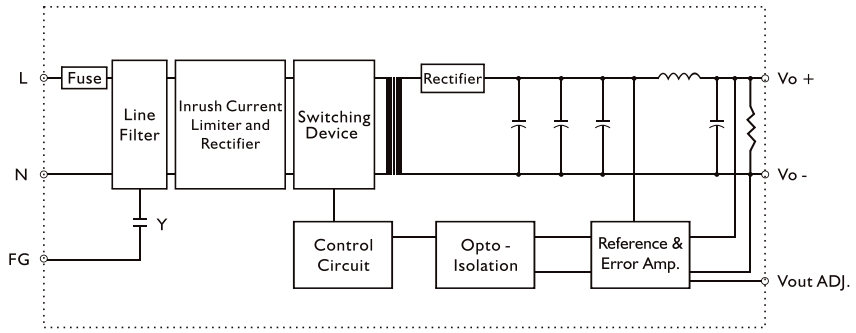

TYP. CURRENT LIMITED CURVE

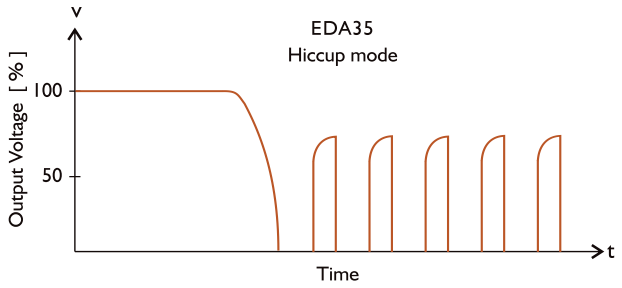

DERATING CURVE

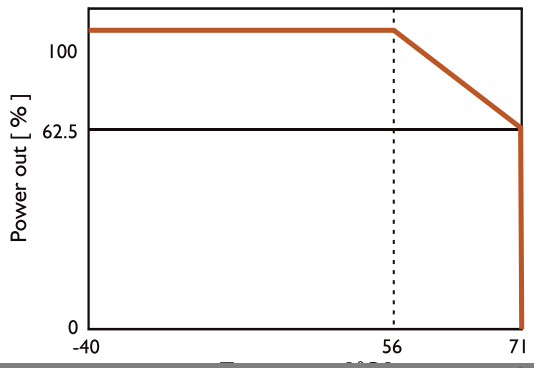

TYP. EFFICIENCY CURVE

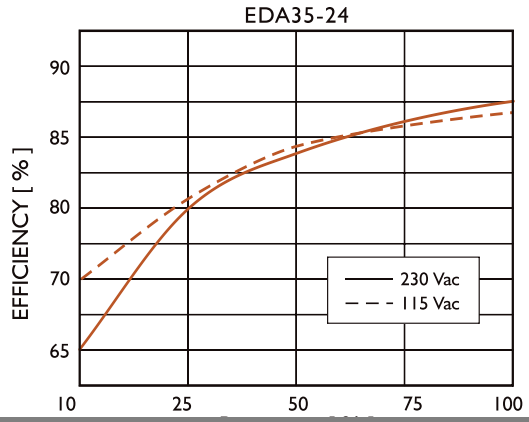

RS, Professionally Approved Products, gives you professional quality parts across all products categories. Our range has been testified by engineers as giving comparable quality to that of the leading brands without paying a premium price.