74HC132; 74HCT132

Quad 2-input NAND Schmitt trigger

Rev. 3 — 30 August 2012 Product data sheet

1. General description

The 74HC132; 74HCT132 is a high-speed Si-gate CMOS device and is pin compatible with Low-power Schottky TTL (LSTTL). It is specified in compliance with JEDEC standard No. 7A

The 74HC132; 74HCT132 is a quad 2-input NAND gate with Schmitt trigger inputs. This device features reduced input threshold levels to allow interfacing to TTL logic levels. Inputs also include clamp diodes that enable the use of current limiting resistors to interface inputs to voltages in excess of V_{CC}. Schmitt trigger inputs transform slowly changing input signals into sharply defined jitter-free output signals.

The inputs switch at different points for positive and negative-going signals. The difference between the positive voltage V_{T+} and the negative voltage V_{T-} is defined as the input hysteresis voltage V_H.

2. Features and benefits

- ESD protection:
  - HBM JESD22-A114F exceeds 2000 V
  - MM JESD22-A115-A exceeds 200 V
- Multiple package options
- Specified from –40 °C to +85 °C and from –40 °C to +125 °C

3. Applications

- Wave and pulse shapers
- Astable multivibrators
- Monostable multivibrators

4. Ordering information

Table 1. Ordering information

Type number	Package			
	Temperature range	Name	Description	Version
74HC132N	−40 °C to +125 °C	DIP14	plastic dual in-line package; 14 leads (300 mil)	SOT27-1
74HCT132N				
74HC132D	−40 °C to +125 °C	SO14	plastic small outline package; 14 leads; body width 3.9 mm	SOT108-1
74HCT132D				
74HC132DB	−40 °C to +125 °C	SSOP14	plastic shrink small outline package; 14 leads; body width 5.3 mm	SOT337-1
74HCT132DB				
74HC132PW	−40 °C to +125 °C	TSSOP14	plastic thin shrink small outline package; 14 leads; body width 4.4 mm	SOT402-1
74HCT132PW				

5. Functional diagram

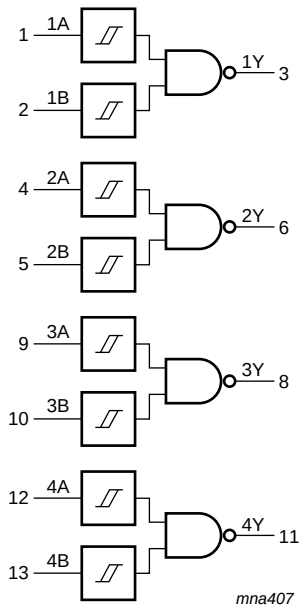

Fig 1. Logic symbol

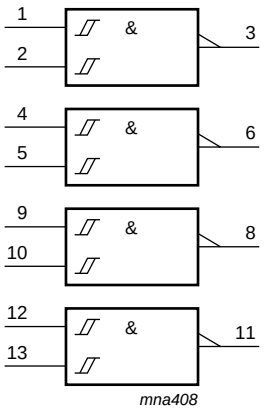

Fig 2. IEC logic symbol

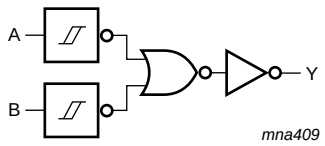

Fig 3. Logic diagram (one Schmitt trigger)

All information provided in this document is subject to legal disclaimers.

© NXP B.V. 2012. All rights reserved.

6. Pinning information

6.1 Pinning

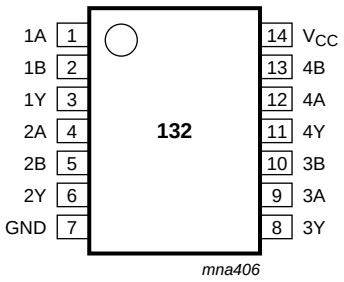

Fig 4. Pin configuration DIP14, SO14 and (T)SSOP14

6.2 Pin description

Table 2. Pin description

Symbol	Pin	Description
1A to 4A	1, 4, 9, 12	data input
1B to 4B	2, 5, 10, 13	data input
1Y to 4Y	3, 6, 8, 11	data output
GND	7	ground (0 V)
V_{CC}	14	supply voltage

7. Functional description

Table 3. Function table[1]

Input		Output
nA	nB	nY
L	L	H
L	H	H
H	L	H
H	H	L

[1] H = HIGH voltage level; L = LOW voltage level; X = don't care.

All information provided in this document is subject to legal disclaimers.

© NXP B.V. 2012. All rights reserved.

8. Limiting values

Table 4. Limiting values

In accordance with the Absolute Maximum Rating System (IEC 60134). Voltages are referenced to GND (ground = 0 V).

Symbol	Parameter	Conditions		Min	Max	Unit
V_{CC}	supply voltage			–0.5	+7	V
I_{IK}	input clamping current	$V_I < -0.5$ V or $V_I > V_{CC} + 0.5$ V	[1]	-	±20	mA
I_{OK}	output clamping current	$V_O < -0.5$ V or $V_O > V_{CC} + 0.5$ V	[1]	-	±20	mA
I_O	output current	-0.5 V $< V_O < V_{CC} + 0.5$ V		-	±25	mA
I_{CC}	supply current			-	50	mA
I_{GND}	ground current			–50	-	mA
T_{stg}	storage temperature			–65	+150	°C
P_{tot}	total power dissipation		[2]			
	DIP14 package			-	750	mW
	SO14, and (T)SSOP14 packages			-	500	mW

[1] The input and output voltage ratings may be exceeded if the input and output current ratings are observed.

[2] For DIP14 package: P_{tot} derates linearly with 12 mW/K above 70 °C.
For SO14 package: P_{tot} derates linearly with 8 mW/K above 70 °C.
For (T)SSOP14 packages: P_{tot} derates linearly with 5.5 mW/K above 60 °C.

9. Recommended operating conditions

Table 5. Recommended operating conditions

Voltages are referenced to GND (ground = 0 V)

Symbol	Parameter	Conditions	74HC132			74HCT132			Unit
			Min	Typ	Max	Min	Typ	Max	
V_{CC}	supply voltage		2.0	5.0	6.0	4.5	5.0	5.5	V
V_I	input voltage		0	-	V_{CC}	0	-	V_{CC}	V
V_O	output voltage		0	-	V_{CC}	0	-	V_{CC}	V
T_{amb}	ambient temperature		–40	+25	+125	–40	+25	+125	°C

All information provided in this document is subject to legal disclaimers.

© NXP B.V. 2012. All rights reserved.

10. Static characteristics

Table 6. Static characteristics

At recommended operating conditions; voltages are referenced to GND (ground = 0 V).

Symbol	Parameter	Conditions	25 °C			–40 °C to +85 °C		–40 °C to +125 °C		Unit
			Min	Typ	Max	Min	Max	Min	Max	
74HC132										
V_{OH}	HIGH-level output voltage	$V_I = V_{T+}$ or V_{T-}								
		$I_O = -20\ \mu A$; $V_{CC} = 2.0\ V$	1.9	2.0	-	1.9	-	1.9	-	V
		$I_O = -20\ \mu A$; $V_{CC} = 4.5\ V$	4.4	4.5	-	4.4	-	4.4	-	V
		$I_O = -20\ \mu A$; $V_{CC} = 6.0\ V$	5.9	6.0	-	5.9	-	5.9	-	V
		$I_O = -4.0\ mA$; $V_{CC} = 4.5\ V$	3.98	4.32	-	3.84	-	3.7	-	V
		$I_O = -5.2\ mA$; $V_{CC} = 6.0\ V$	5.48	5.81	-	5.34	-	5.2	-	V
V_{OL}	LOW-level output voltage	$V_I = V_{T+}$ or V_{T-}								
		$I_O = 20\ \mu A$; $V_{CC} = 2.0\ V$	-	0	0.1	-	0.1	-	0.1	V
		$I_O = 20\ \mu A$; $V_{CC} = 4.5\ V$	-	0	0.1	-	0.1	-	0.1	V
		$I_O = 20\ \mu A$; $V_{CC} = 6.0\ V$	-	0	0.1	-	0.1	-	0.1	V
		$I_O = 4.0\ mA$; $V_{CC} = 4.5\ V$	-	0.15	0.26	-	0.33	-	0.4	V
		$I_O = 5.2\ mA$; $V_{CC} = 6.0\ V$	-	0.16	0.26	-	0.33	-	0.4	V
I_I	input leakage current	$V_I = V_{CC}$ or GND; $V_{CC} = 6.0\ V$	-	-	±0.1	-	±1.0	-	±1.0	μA
I_{CC}	supply current	$V_I = V_{CC}$ or GND; $I_O = 0\ A$; $V_{CC} = 6.0\ V$	-	-	2.0	-	20	-	40	μA
C_I	input capacitance		-	3.5	-	-	-	-	-	pF
74HCT132										
V_{OH}	HIGH-level output voltage	$V_I = V_{T+}$ or V_{T-}; $V_{CC} = 4.5\ V$								
		$I_O = -20\ \mu A$	4.4	4.5	-	4.4	-	4.4	-	V
		$I_O = -4.0\ mA$	3.98	4.32	-	3.84	-	3.7	-	V
V_{OL}	LOW-level output voltage	$V_I = V_{T+}$ or V_{T-}; $V_{CC} = 4.5\ V$								
		$I_O = 20\ \mu A$;	-	0	0.1	-	0.1	-	0.1	V
		$I_O = 4.0\ mA$;	-	0.15	0.26	-	0.33	-	0.4	V
I_I	input leakage current	$V_I = V_{CC}$ or GND; $V_{CC} = 5.5\ V$	-	-	±0.1	-	±1.0	-	±1.0	μA
I_{CC}	supply current	$V_I = V_{CC}$ or GND; $I_O = 0\ A$; $V_{CC} = 5.5\ V$	-	-	2.0	-	20	-	40	μA
ΔI_{CC}	additional supply current	per input pin; $V_I = V_{CC} - 2.1\ V$; $I_O = 0\ A$; other inputs at V_{CC} or GND; $V_{CC} = 4.5\ V$ to $5.5\ V$	-	30	108	-	135	-	147	μA
C_I	input capacitance		-	3.5	-	-	-	-	-	pF

All information provided in this document is subject to legal disclaimers.

© NXP B.V. 2012. All rights reserved.

11. Dynamic characteristics

Table 7. Dynamic characteristics

GND = 0 V; C_L = 50 pF; for load circuit see Figure 6.

Symbol	Parameter	Conditions		25 °C			–40 °C to +125 °C		Unit
				Min	Typ	Max	Max (85 °C)	Max (125 °C)	
74HC132									
t_{pd}	propagation delay	nA, nB to nY; see Figure 5	[1]						
		V_{CC} = 2.0 V		-	36	125	155	190	ns
		V_{CC} = 4.5 V		-	13	25	31	38	ns
		V_{CC} = 5.0 V; C_L = 15 pF		-	11	-	-	-	ns
		V_{CC} = 6.0 V		-	10	21	26	32	ns
t_t	transition time	see Figure 5	[2]						
		V_{CC} = 2.0 V		-	19	75	95	110	ns
		V_{CC} = 4.5 V		-	7	15	19	22	ns
		V_{CC} = 6.0 V		-	6	13	16	19	ns
C_{PD}	power dissipation capacitance	per package; V_I = GND to V_{CC}	[3]	-	24	-	-	-	pF
74HCT132									
t_{pd}	propagation delay	nA, nB to nY; see Figure 5	[1]						
		V_{CC} = 4.5 V		-	20	33	41	50	ns
		V_{CC} = 5.0 V; C_L = 15 pF		-	17	-	-	-	ns
t_t	transition time	V_{CC} = 4.5 V; see Figure 5	[2]	-	7	15	19	22	ns
C_{PD}	power dissipation capacitance	per package; V_I = GND to V_{CC} – 1.5 V	[3]	-	20	-	-	-	pF

[1] t_{pd} is the same as t_{PHL} and t_{PLH}.

[2] t_t is the same as t_{THL} and t_{TLH}.

[3] C_{PD} is used to determine the dynamic power dissipation (P_D in μW):

$P_D = C_{PD} \times V_{CC}^2 \times f_i \times N + \Sigma (C_L \times V_{CC}^2 \times f_o)$ where:

f_i = input frequency in MHz;

f_o = output frequency in MHz;

C_L = output load capacitance in pF;

V_{CC} = supply voltage in V;

N = number of inputs switching;

$\Sigma (C_L \times V_{CC}^2 \times f_o)$ = sum of outputs.

All information provided in this document is subject to legal disclaimers.

© NXP B.V. 2012. All rights reserved.

12. Waveforms

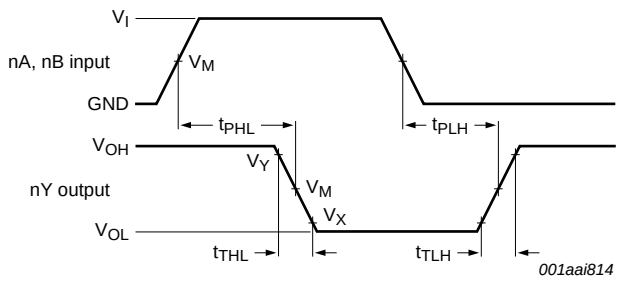

Measurement points are given in Table 8.

V_{OL} and V_{OH} are typical voltage output levels that occur with the output load.

Fig 5. Input to output propagation delays

Table 8. Measurement points

Type	Input	Output		
	V_M	V_M	V_X	V_Y
74HC132	$0.5V_{CC}$	$0.5V_{CC}$	$0.1V_{CC}$	$0.9V_{CC}$
74HCT132	1.3 V	1.3 V	$0.1V_{CC}$	$0.9V_{CC}$

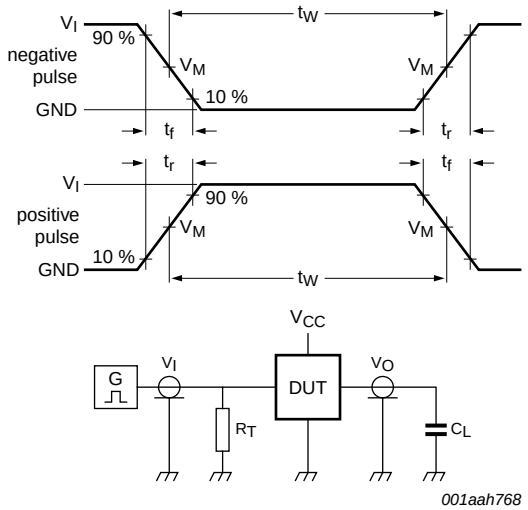

Test data is given in Table 9.

Definitions test circuit:

R_T = termination resistance should be equal to output impedance Z_o of the pulse generator.

C_L = load capacitance including jig and probe capacitance.

Fig 6. Load circuitry for measuring switching times

All information provided in this document is subject to legal disclaimers.

© NXP B.V. 2012. All rights reserved.

Table 9. Test data

Type	Input		Load	Test
	V_I	t_r, t_f	C_L	
74HC132	V_{CC}	6.0 ns	15 pF, 50 pF	t_{PLH}, t_{PHL}
74HCT132	3.0 V	6.0 ns	15 pF, 50 pF	t_{PLH}, t_{PHL}

13. Transfer characteristics

Table 10. Transfer characteristics

At recommended operating conditions; voltages are referenced to GND (ground = 0 V); see Figure 7 and Figure 8.

Symbol	Parameter	Conditions	T_{amb} = 25 °C			T_{amb} = –40 °C to +85 °C		T_{amb} = –40 °C to +125 °C		Unit
			Min	Typ	Max	Min	Max	Min	Max	
74HC132										
V_{T+}	positive-going threshold voltage	V_{CC} = 2.0 V	0.7	1.18	1.5	0.7	1.5	0.7	1.5	V
		V_{CC} = 4.5 V	1.7	2.38	3.15	1.7	3.15	1.7	3.15	V
		V_{CC} = 6.0 V	2.1	3.14	4.2	2.1	4.2	2.1	4.2	V
V_{T-}	negative-going threshold voltage	V_{CC} = 2.0 V	0.3	0.63	1.0	0.3	1.0	0.3	1.0	V
		V_{CC} = 4.5 V	0.9	1.67	2.2	0.9	2.2	0.9	2.2	V
		V_{CC} = 6.0 V	1.2	2.26	3.0	1.2	3.0	1.2	3.0	V
V_H	hysteresis voltage	V_{CC} = 2.0 V	0.2	0.55	1.0	0.2	1.0	0.2	1.0	V
		V_{CC} = 4.5 V	0.4	0.71	1.4	0.4	1.4	0.4	1.4	V
		V_{CC} = 6.0 V	0.6	0.88	1.6	0.6	1.6	0.6	1.6	V
74HCT132										
V_{T+}	positive-going threshold voltage	V_{CC} = 4.5 V	1.2	1.41	1.9	1.2	1.9	1.2	1.9	V
		V_{CC} = 5.5 V	1.4	1.59	2.1	1.4	2.1	1.4	2.1	V
V_{T-}	negative-going threshold voltage	V_{CC} = 4.5 V	0.5	0.85	1.2	0.5	1.2	0.5	1.2	V
		V_{CC} = 5.5 V	0.6	0.99	1.4	0.6	1.4	0.6	1.4	V
V_H	hysteresis voltage	V_{CC} = 4.5 V	0.4	0.56	-	0.4	-	0.4	-	V
		V_{CC} = 5.5 V	0.4	0.60	-	0.4	-	0.4	-	V

14. Transfer characteristics waveforms

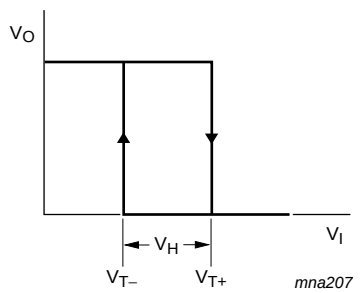

Fig 7. Transfer characteristics

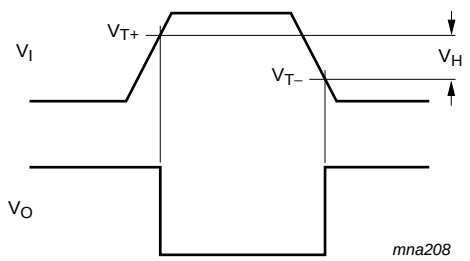

Fig 8. Transfer characteristics definitions

All information provided in this document is subject to legal disclaimers.

© NXP B.V. 2012. All rights reserved.

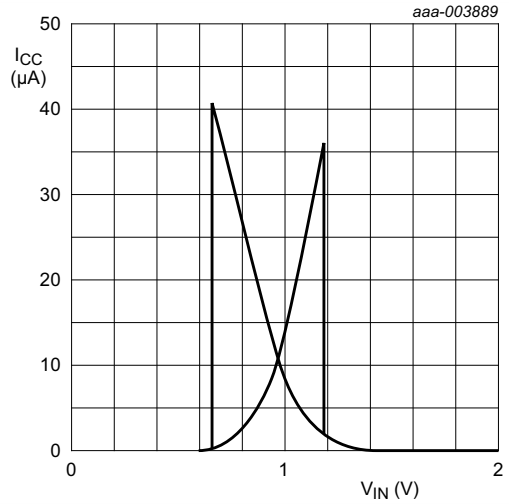

a. V_{CC} = 2.0 V

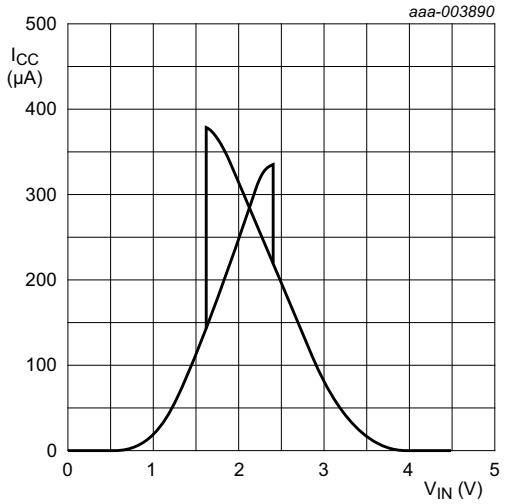

b. V_{CC} = 4.5 V

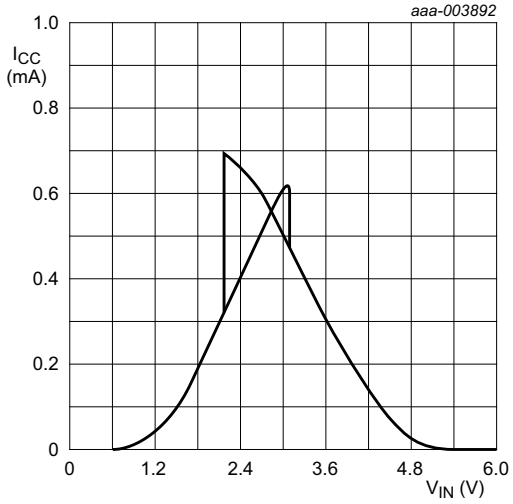

c. V_{CC} = 6.0 V

Fig 9. Typical 74HC132 transfer characteristics

All information provided in this document is subject to legal disclaimers.

© NXP B.V. 2012. All rights reserved.

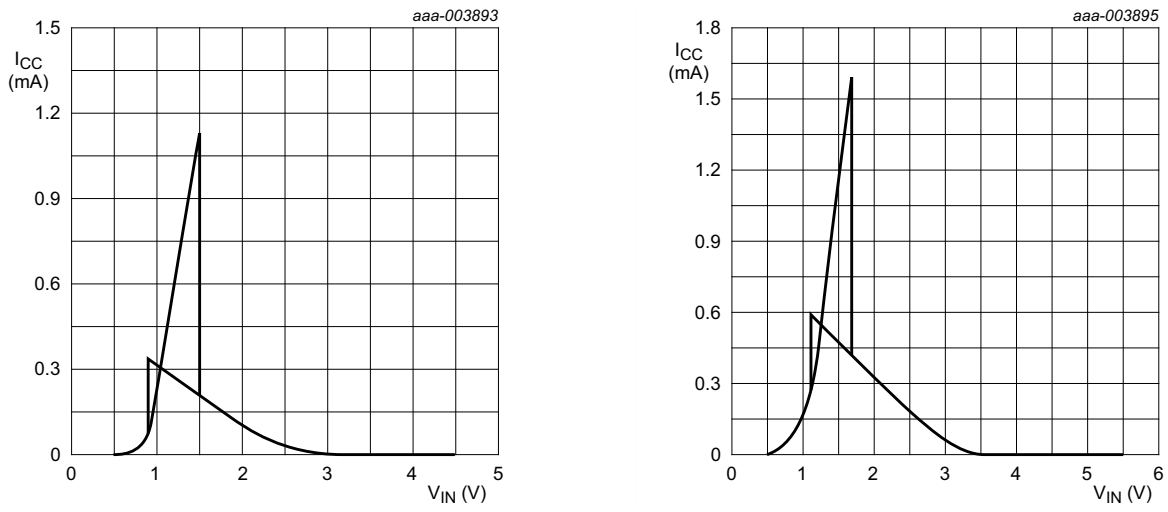

a. V_{CC} = 4.5 V

b. V_{CC} = 5.5 V

Fig 10. Typical 74HCT132 transfer characteristics

15. Application information

The slow input rise and fall times cause additional power dissipation, this can be calculated using the following formula:

$P_{add} = f_i \times (t_r \times \Delta I_{CC(AV)} + t_f \times \Delta I_{CC(AV)}) \times V_{CC}$ where:

P_{add} = additional power dissipation (μW);

f_i = input frequency (MHz);

t_r = rise time (ns); 10 % to 90 %;

t_f = fall time (ns); 90 % to 10 %;

$\Delta I_{CC(AV)}$ = average additional supply current (μA).

Average $\Delta I_{CC(AV)}$ differs with positive or negative input transitions, as shown in Figure 11 and Figure 12.

An example of a relaxation circuit using the 74HC132; 74HCT132 is shown in Figure 13.

All information provided in this document is subject to legal disclaimers.

© NXP B.V. 2012. All rights reserved.

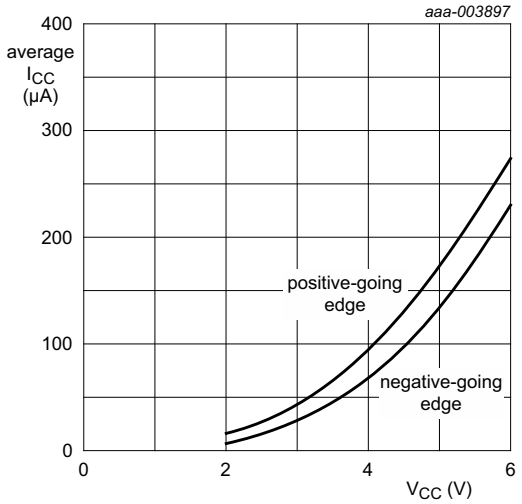

(1) Positive-going edge.

(2) Negative-going edge.

Fig 11. Average additional supply current as a function of V_{CC} for 74HC132; linear change of V_I between $0.1V_{CC}$ to $0.9V_{CC}$.

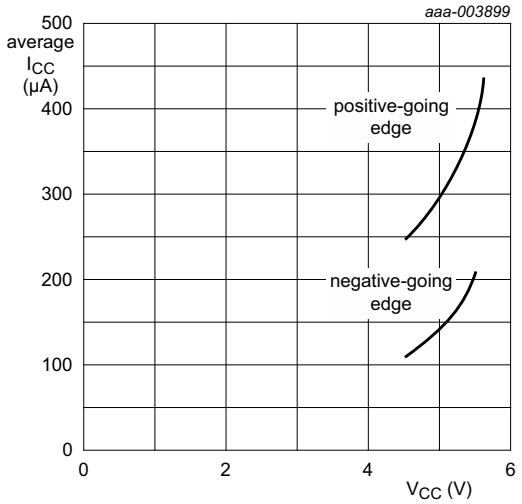

(1) Positive-going edge.

(2) Negative-going edge.

Fig 12. Average additional supply current as a function of V_{CC} for 74HCT132; linear change of V_I between $0.1V_{CC}$ to $0.9V_{CC}$.

All information provided in this document is subject to legal disclaimers.

© NXP B.V. 2012. All rights reserved.

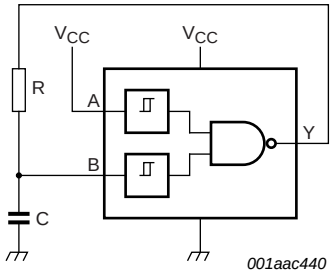

For 74HC132 and 74HCT132: $f = \frac{1}{T} \approx \frac{1}{K \times RC}$

For K-factor, see Figure 14

Fig 13. Relaxation oscillator

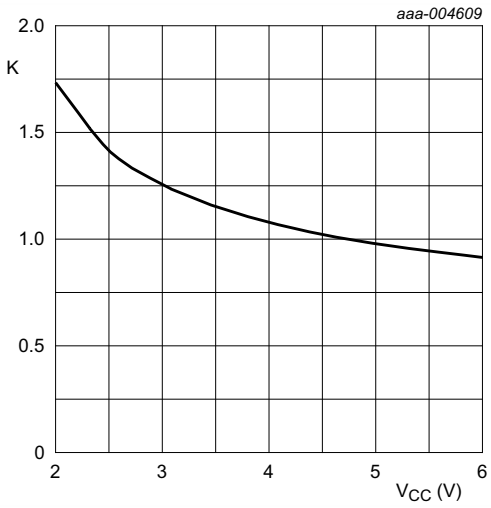

K-factor for 74HC132

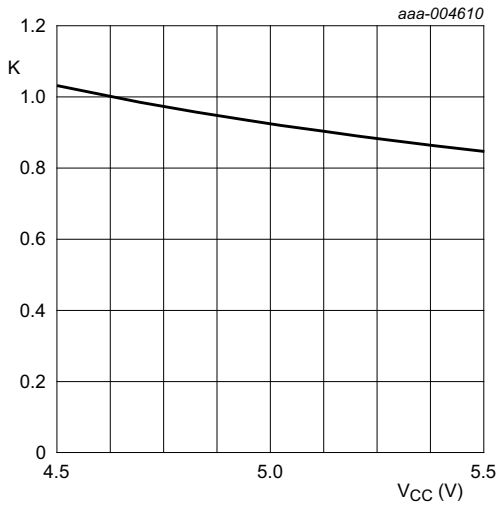

K-factor for 74HCT132

Fig 14. Typical K-factor for relaxation oscillator

All information provided in this document is subject to legal disclaimers.

© NXP B.V. 2012. All rights reserved.

16. Package outline

DIP14: plastic dual in-line package; 14 leads (300 mil) **SOT27-1**

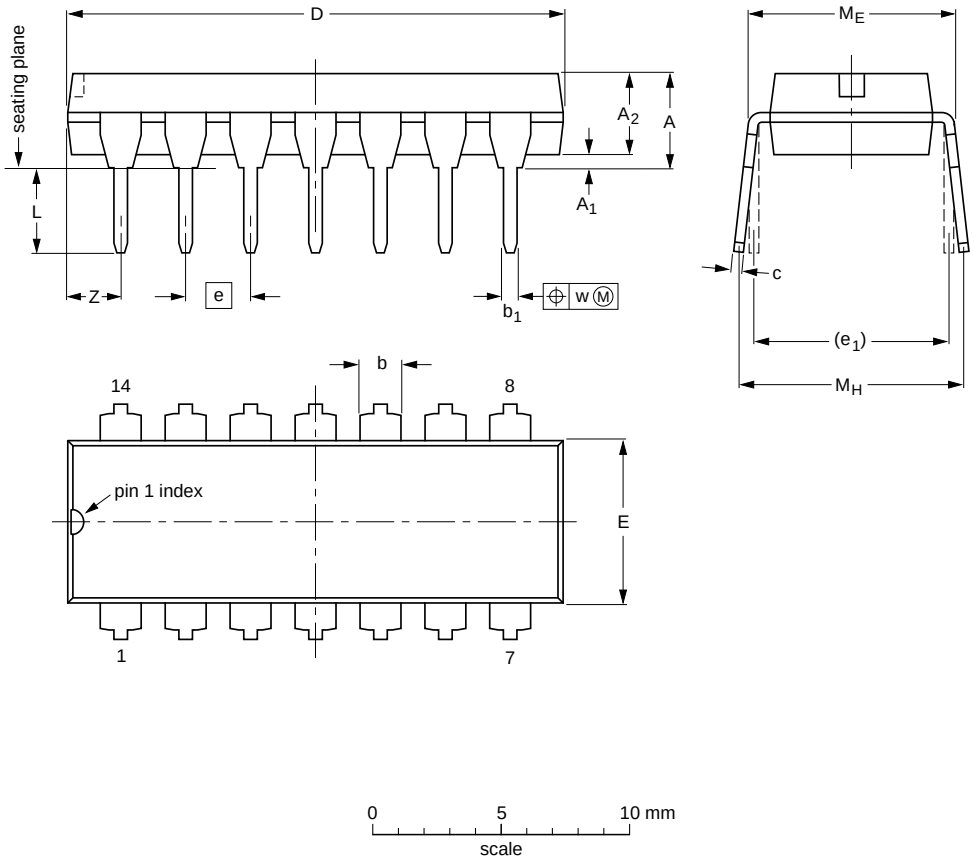

DIMENSIONS (inch dimensions are derived from the original mm dimensions)

UNIT	A max.	A_1 min.	A_2 max.	b	b_1	c	D (1)	E (1)	e	e_1	L	M_E	M_H	w	Z (1) max.
mm	4.2	0.51	3.2	1.73 1.13	0.53 0.38	0.36 0.23	19.50 18.55	6.48 6.20	2.54	7.62	3.60 3.05	8.25 7.80	10.0 8.3	0.254	2.2
inches	0.17	0.02	0.13	0.068 0.044	0.021 0.015	0.014 0.009	0.77 0.73	0.26 0.24	0.1	0.3	0.14 0.12	0.32 0.31	0.39 0.33	0.01	0.087

Note

1. Plastic or metal protrusions of 0.25 mm (0.01 inch) maximum per side are not included.

OUTLINE VERSION	REFERENCES				EUROPEAN PROJECTION	ISSUE DATE
	IEC	JEDEC	JEITA			
SOT27-1	050G04	MO-001	SC-501-14			~~99-12-27~~ 03-02-13

Fig 15. Package outline SOT27-1 (DIP14)

All information provided in this document is subject to legal disclaimers.

© NXP B.V. 2012. All rights reserved.

SO14: plastic small outline package; 14 leads; body width 3.9 mm **SOT108-1**

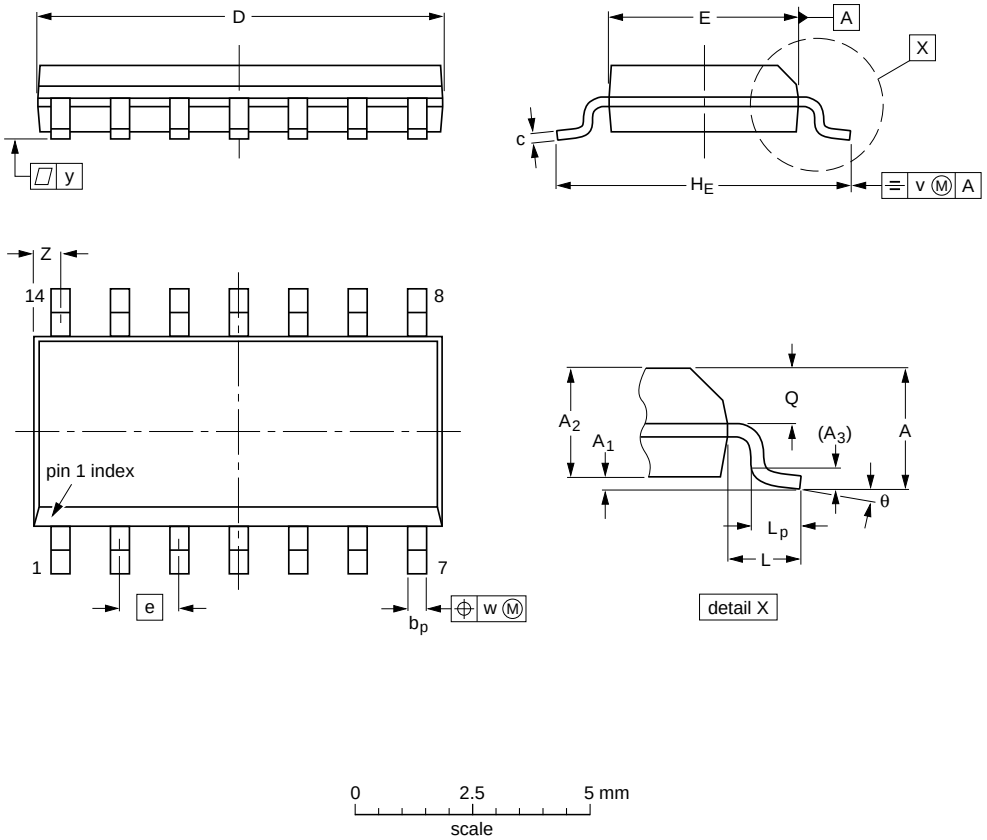

DIMENSIONS (inch dimensions are derived from the original mm dimensions)

UNIT	A max.	A_1	A_2	A_3	b_p	c	D(1)	E(1)	e	H_E	L	L_p	Q	v	w	y	Z(1)	θ
mm	1.75	0.25 0.10	1.45 1.25	0.25	0.49 0.36	0.25 0.19	8.75 8.55	4.0 3.8	1.27	6.2 5.8	1.05	1.0 0.4	0.7 0.6	0.25	0.25	0.1	0.7 0.3	8° 0°
inches	0.069	0.010 0.004	0.057 0.049	0.01	0.019 0.014	0.0100 0.0075	0.35 0.34	0.16 0.15	0.05	0.244 0.228	0.041	0.039 0.016	0.028 0.024	0.01	0.01	0.004	0.028 0.012	

Note

1. Plastic or metal protrusions of 0.15 mm (0.006 inch) maximum per side are not included.

OUTLINE VERSION	REFERENCES				EUROPEAN PROJECTION	ISSUE DATE
	IEC	JEDEC	JEITA			
SOT108-1	076E06	MS-012				~~99-12-27~~ 03-02-19

Fig 16. Package outline SOT108-1 (SO14)

All information provided in this document is subject to legal disclaimers.

© NXP B.V. 2012. All rights reserved.

SSOP14: plastic shrink small outline package; 14 leads; body width 5.3 mm **SOT337-1**

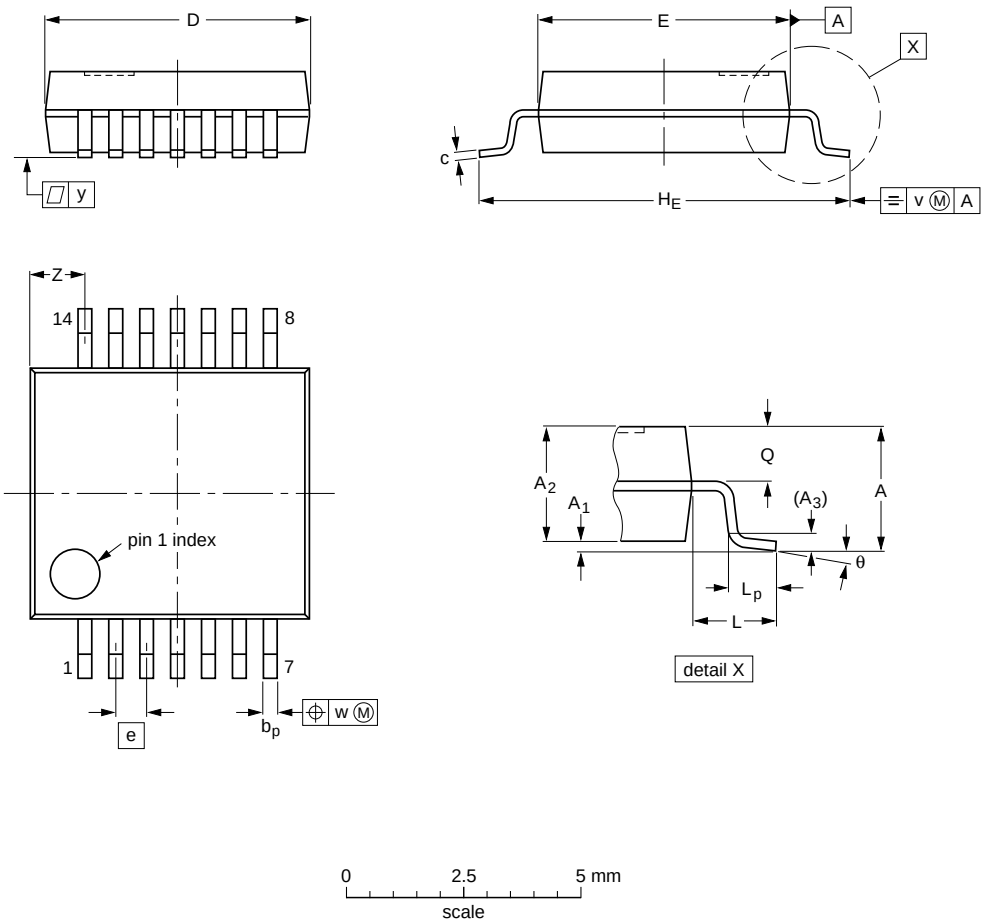

DIMENSIONS (mm are the original dimensions)

UNIT	A max.	A_1	A_2	A_3	b_p	c	D (1)	E (1)	e	H_E	L	L_p	Q	v	w	y	Z (1)	θ
mm	2	0.21 0.05	1.80 1.65	0.25	0.38 0.25	0.20 0.09	6.4 6.0	5.4 5.2	0.65	7.9 7.6	1.25	1.03 0.63	0.9 0.7	0.2	0.13	0.1	1.4 0.9	8° 0°

Note

1. Plastic or metal protrusions of 0.25 mm maximum per side are not included.

OUTLINE VERSION	REFERENCES				EUROPEAN PROJECTION	ISSUE DATE
	IEC	JEDEC	JEITA			
SOT337-1		MO-150				~~99-12-27~~ 03-02-19

Fig 17. Package outline SOT337-1 (SSOP14)

All information provided in this document is subject to legal disclaimers.

© NXP B.V. 2012. All rights reserved.

TSSOP14: plastic thin shrink small outline package; 14 leads; body width 4.4 mm **SOT402-1**

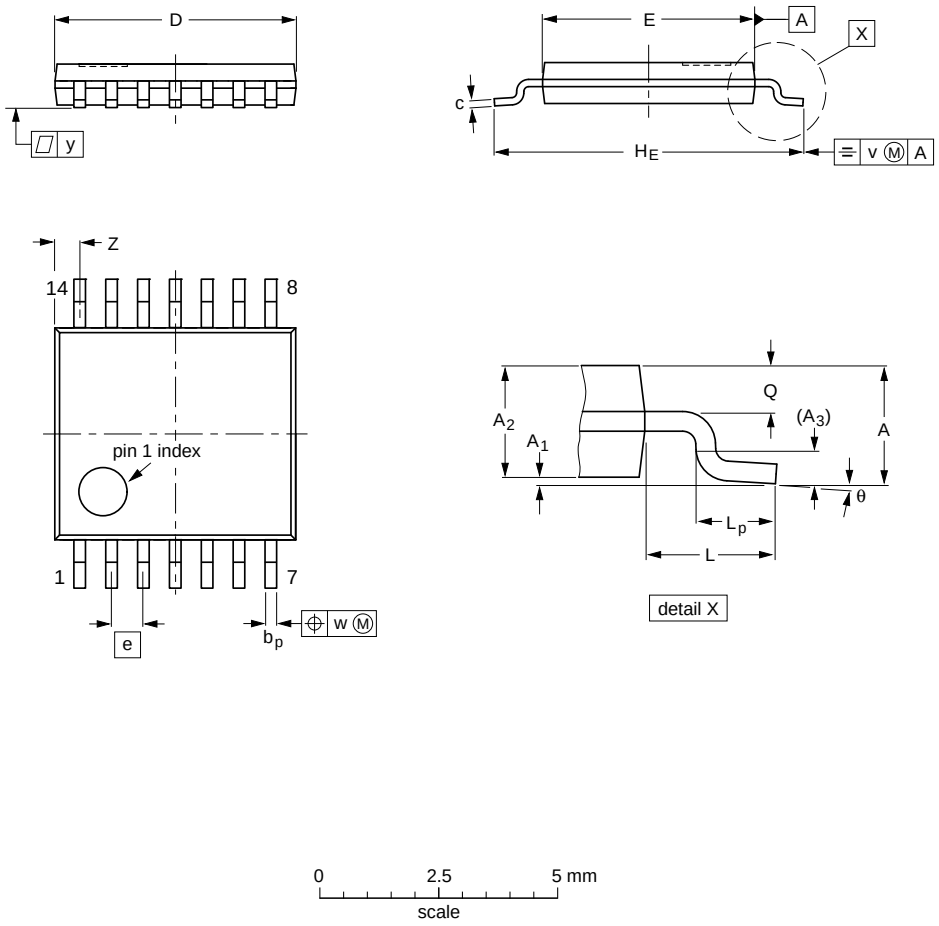

DIMENSIONS (mm are the original dimensions)

UNIT	A max.	A_1	A_2	A_3	b_p	c	D (1)	E (2)	e	H_E	L	L_p	Q	v	w	y	Z (1)	θ
mm	1.1	0.15 0.05	0.95 0.80	0.25	0.30 0.19	0.2 0.1	5.1 4.9	4.5 4.3	0.65	6.6 6.2	1	0.75 0.50	0.4 0.3	0.2	0.13	0.1	0.72 0.38	8° 0°

Notes

1. Plastic or metal protrusions of 0.15 mm maximum per side are not included.
2. Plastic interlead protrusions of 0.25 mm maximum per side are not included.

OUTLINE VERSION	REFERENCES				EUROPEAN PROJECTION	ISSUE DATE
	IEC	JEDEC	JEITA			
SOT402-1		MO-153				~~99-12-27~~ 03-02-18

Fig 18. Package outline SOT402-1 (TSSOP14)

All information provided in this document is subject to legal disclaimers.

© NXP B.V. 2012. All rights reserved.

17. Abbreviations

Table 11. Abbreviations

Acronym	Description
CMOS	Complementary Metal-Oxide Semiconductor
DUT	Device Under Test
ESD	ElectroStatic Discharge
HBM	Human Body Model
LSTTL	Low-power Schottky Transistor-Transistor Logic
MM	Machine Model
TTL	Transistor-Transistor Logic

18. Revision history

Table 12. Revision history

Document ID	Release date	Data sheet status	Change notice	Supersedes
74HC_HCT132 v.3	20120830	Product data sheet	-	74HC_HCT132_CNV v.2
Modifications:	• The format of this data sheet has been redesigned to comply with the new identity guidelines of NXP Semiconductors. • Legal texts have been adapted to the new company name where appropriate. • Figure 14 added (typical K-factor for relaxation oscillator).			
74HC_HCT132_CNV v.2	19970826	Product specification	-	-

All information provided in this document is subject to legal disclaimers.

© NXP B.V. 2012. All rights reserved.

19. Legal information

19.1 Data sheet status

Document status[1][2]	Product status[3]	Definition
Objective [short] data sheet	Development	This document contains data from the objective specification for product development.
Preliminary [short] data sheet	Qualification	This document contains data from the preliminary specification.
Product [short] data sheet	Production	This document contains the product specification.

[1] Please consult the most recently issued document before initiating or completing a design.

[2] The term 'short data sheet' is explained in section "Definitions".

[3] The product status of device(s) described in this document may have changed since this document was published and may differ in case of multiple devices. The latest product status information is available on the Internet at URL http://www.nxp.com.

19.2 Definitions

Draft — The document is a draft version only. The content is still under internal review and subject to formal approval, which may result in modifications or additions. NXP Semiconductors does not give any representations or warranties as to the accuracy or completeness of information included herein and shall have no liability for the consequences of use of such information.

Short data sheet — A short data sheet is an extract from a full data sheet with the same product type number(s) and title. A short data sheet is intended for quick reference only and should not be relied upon to contain detailed and full information. For detailed and full information see the relevant full data sheet, which is available on request via the local NXP Semiconductors sales office. In case of any inconsistency or conflict with the short data sheet, the full data sheet shall prevail.

Product specification — The information and data provided in a Product data sheet shall define the specification of the product as agreed between NXP Semiconductors and its customer, unless NXP Semiconductors and customer have explicitly agreed otherwise in writing. In no event however, shall an agreement be valid in which the NXP Semiconductors product is deemed to offer functions and qualities beyond those described in the Product data sheet.

19.3 Disclaimers

Limited warranty and liability — Information in this document is believed to be accurate and reliable. However, NXP Semiconductors does not give any representations or warranties, expressed or implied, as to the accuracy or completeness of such information and shall have no liability for the consequences of use of such information. NXP Semiconductors takes no responsibility for the content in this document if provided by an information source outside of NXP Semiconductors.

In no event shall NXP Semiconductors be liable for any indirect, incidental, punitive, special or consequential damages (including - without limitation - lost profits, lost savings, business interruption, costs related to the removal or replacement of any products or rework charges) whether or not such damages are based on tort (including negligence), warranty, breach of contract or any other legal theory.

Notwithstanding any damages that customer might incur for any reason whatsoever, NXP Semiconductors' aggregate and cumulative liability towards customer for the products described herein shall be limited in accordance with the *Terms and conditions of commercial sale* of NXP Semiconductors.

Right to make changes — NXP Semiconductors reserves the right to make changes to information published in this document, including without limitation specifications and product descriptions, at any time and without notice. This document supersedes and replaces all information supplied prior to the publication hereof.

Suitability for use — NXP Semiconductors products are not designed, authorized or warranted to be suitable for use in life support, life-critical or safety-critical systems or equipment, nor in applications where failure or malfunction of an NXP Semiconductors product can reasonably be expected to result in personal injury, death or severe property or environmental damage. NXP Semiconductors and its suppliers accept no liability for inclusion and/or use of NXP Semiconductors products in such equipment or applications and therefore such inclusion and/or use is at the customer's own risk.

Applications — Applications that are described herein for any of these products are for illustrative purposes only. NXP Semiconductors makes no representation or warranty that such applications will be suitable for the specified use without further testing or modification.

Customers are responsible for the design and operation of their applications and products using NXP Semiconductors products, and NXP Semiconductors accepts no liability for any assistance with applications or customer product design. It is customer's sole responsibility to determine whether the NXP Semiconductors product is suitable and fit for the customer's applications and products planned, as well as for the planned application and use of customer's third party customer(s). Customers should provide appropriate design and operating safeguards to minimize the risks associated with their applications and products.

NXP Semiconductors does not accept any liability related to any default, damage, costs or problem which is based on any weakness or default in the customer's applications or products, or the application or use by customer's third party customer(s). Customer is responsible for doing all necessary testing for the customer's applications and products using NXP Semiconductors products in order to avoid a default of the applications and the products or of the application or use by customer's third party customer(s). NXP does not accept any liability in this respect.

Limiting values — Stress above one or more limiting values (as defined in the Absolute Maximum Ratings System of IEC 60134) will cause permanent damage to the device. Limiting values are stress ratings only and (proper) operation of the device at these or any other conditions above those given in the Recommended operating conditions section (if present) or the Characteristics sections of this document is not warranted. Constant or repeated exposure to limiting values will permanently and irreversibly affect the quality and reliability of the device.

Terms and conditions of commercial sale — NXP Semiconductors products are sold subject to the general terms and conditions of commercial sale, as published at http://www.nxp.com/profile/terms, unless otherwise agreed in a valid written individual agreement. In case an individual agreement is concluded only the terms and conditions of the respective agreement shall apply. NXP Semiconductors hereby expressly objects to applying the customer's general terms and conditions with regard to the purchase of NXP Semiconductors products by customer.

No offer to sell or license — Nothing in this document may be interpreted or construed as an offer to sell products that is open for acceptance or the grant, conveyance or implication of any license under any copyrights, patents or other industrial or intellectual property rights.

All information provided in this document is subject to legal disclaimers.

© NXP B.V. 2012. All rights reserved.

Export control — This document as well as the item(s) described herein may be subject to export control regulations. Export might require a prior authorization from competent authorities.

Non-automotive qualified products — Unless this data sheet expressly states that this specific NXP Semiconductors product is automotive qualified, the product is not suitable for automotive use. It is neither qualified nor tested in accordance with automotive testing or application requirements. NXP Semiconductors accepts no liability for inclusion and/or use of non-automotive qualified products in automotive equipment or applications.

In the event that customer uses the product for design-in and use in automotive applications to automotive specifications and standards, customer (a) shall use the product without NXP Semiconductors' warranty of the product for such automotive applications, use and specifications, and (b) whenever customer uses the product for automotive applications beyond NXP Semiconductors' specifications such use shall be solely at customer's own risk, and (c) customer fully indemnifies NXP Semiconductors for any liability, damages or failed product claims resulting from customer design and use of the product for automotive applications beyond NXP Semiconductors' standard warranty and NXP Semiconductors' product specifications.

Translations — A non-English (translated) version of a document is for reference only. The English version shall prevail in case of any discrepancy between the translated and English versions.

19.4 Trademarks

Notice: All referenced brands, product names, service names and trademarks are the property of their respective owners.

20. Contact information

For more information, please visit: **http://www.nxp.com**

For sales office addresses, please send an email to: **salesaddresses@nxp.com**

All information provided in this document is subject to legal disclaimers.

© NXP B.V. 2012. All rights reserved.

21. Contents

1 General description 1
2 Features and benefits 1
3 Applications 1
4 Ordering information 2
5 Functional diagram 2
6 Pinning information 3
6.1 Pinning 3
6.2 Pin description 3
7 Functional description 3
8 Limiting values 4
9 Recommended operating conditions 4
10 Static characteristics 5
11 Dynamic characteristics 6
12 Waveforms 7
13 Transfer characteristics 8
14 Transfer characteristics waveforms 8
15 Application information 10
16 Package outline 13
17 Abbreviations 17
18 Revision history 17
19 Legal information 18
19.1 Data sheet status 18
19.2 Definitions 18
19.3 Disclaimers 18
19.4 Trademarks 19
20 Contact information 19
21 Contents 20

Please be aware that important notices concerning this document and the product(s) described herein, have been included in section 'Legal information'.

© NXP B.V. 2012. All rights reserved.

For more information, please visit: http://www.nxp.com
For sales office addresses, please send an email to: salesaddresses@nxp.com

Date of release: 30 August 2012
Document identifier: 74HC_HCT132

Mouser Electronics

Authorized Distributor

Click to View Pricing, Inventory, Delivery & Lifecycle Information:

NXP:
74HC132D,652 74HC132DB,112 74HC132DB,118 74HC132D,653 74HC132N,652 74HC132PW,112 74HC132PW,118 74HCT132D,652 74HCT132DB,112 74HCT132DB,118 74HCT132D,653 74HCT132N,652 74HCT132PW,112 74HCT132PW,118