Downloaded from Elcodis.com electronic components distributor

REVISIONS			
REV	ECR NO	DESCRIPTION	DATE
A	16926	NEW RELEASE	10/5/98
B	17117	CHG'D DIST KB	11/12/98

NOTES:
1. LIGHTPIPE TO BE MOLDED IN A CLEAR 94-VO POLYCARBONATE.
2. (Q) COMPONENT TO BE FREE OF IMPERFECTIONS WHICH WOULD INTERFERE WITH THE DESIGNED LIGHT OUTPUT.

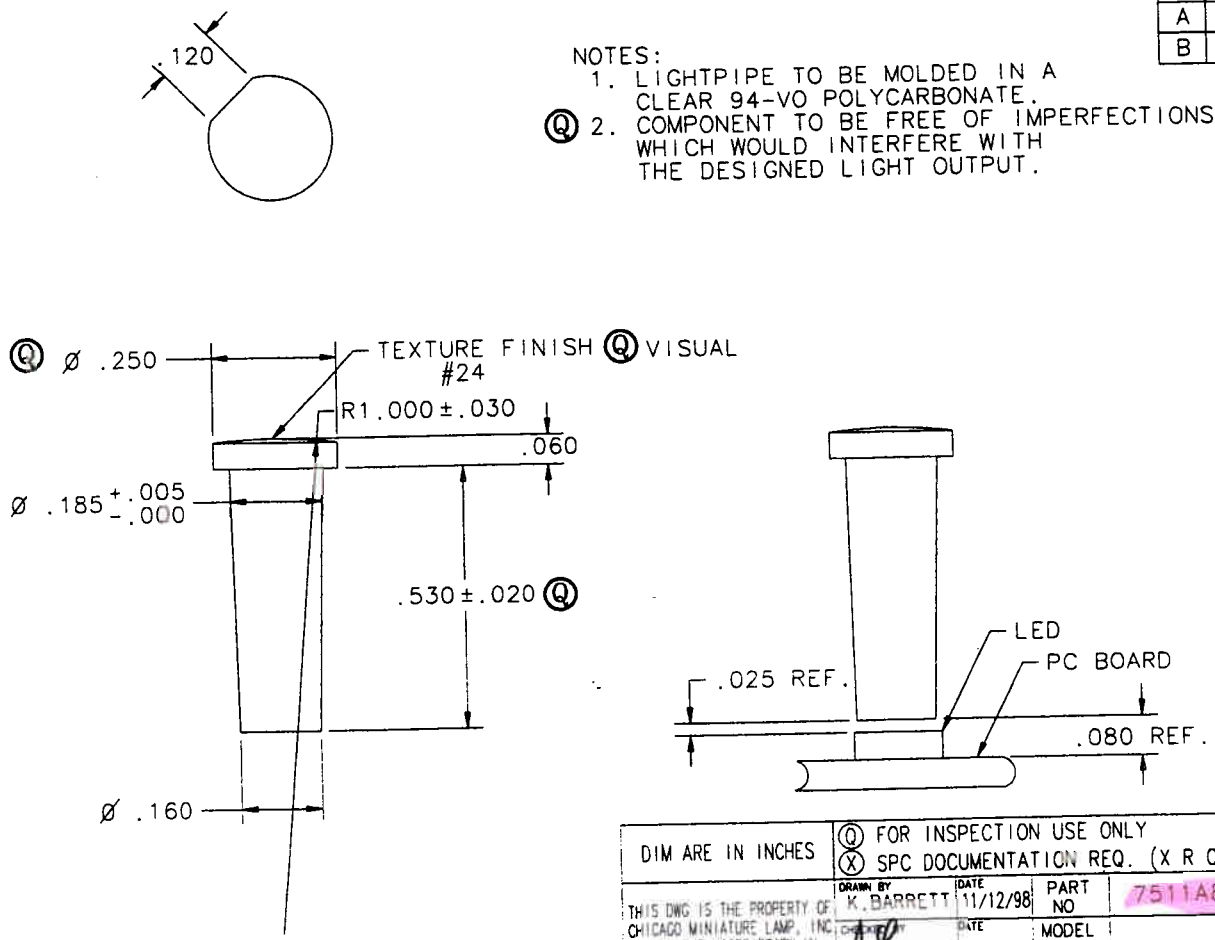

DIM ARE IN INCHES

(Q) FOR INSPECTION USE ONLY
(X) SPC DOCUMENTATION REQ. (X R CHARTS)

THIS DWG IS THE PROPERTY OF CHICAGO MINIATURE LAMP, INC. AND THE PROPRIETARY IN GENERAL AND IN DETAIL. IT SHALL NOT BE COPIED OR ITS CONTENTS REVEALED TO OUTSIDE PARTIES WITHOUT THE WRITTEN CONSENT OF CHICAGO MINIATURE LAMP, INC.

DRAWN BY K. BARRETT	DATE 11/12/98	PART NO	7511A86
CHECKED BY	DATE	MODEL NO	
APPROVED	DATE 11/16/98	MOLD NO	
UNLESS OTHERWISE SPECIFIED TOLERANCES ON: .XX +/- .010 .XXX +/- .010 ANGLE +/- 1 DEG.		MATERIAL	SEE NOTE 1
		FINISH	NOTED

CHICAGO MINIATURE LAMP, INC.
147 CENTRAL AVE. HACKENSACK, NJ 07601

TITLE: VERTICAL LIGHTPIPE

DIST. S	DWG NO B15413	REV B	
SCALE 4 : 1	SHEET 1 OF 1		

SDRC FILE NAME: 7511A86_1198_KB.MF1

OCT 1 0 ATO