THIS DRAWING IS UNPUBLISHED. RELEASED FOR PUBLICATION -.-.-
© COPYRIGHT - - BY TYCO ELECTRONICS CORPORATION. ALL RIGHTS RESERVED.

LOC	DIST
GP	00

REVISIONS

P	LTR	DESCRIPTION	DATE	DRN	APVD
	F1	REVISED PER ECO-06-020084	01-30-07	CJV	SS

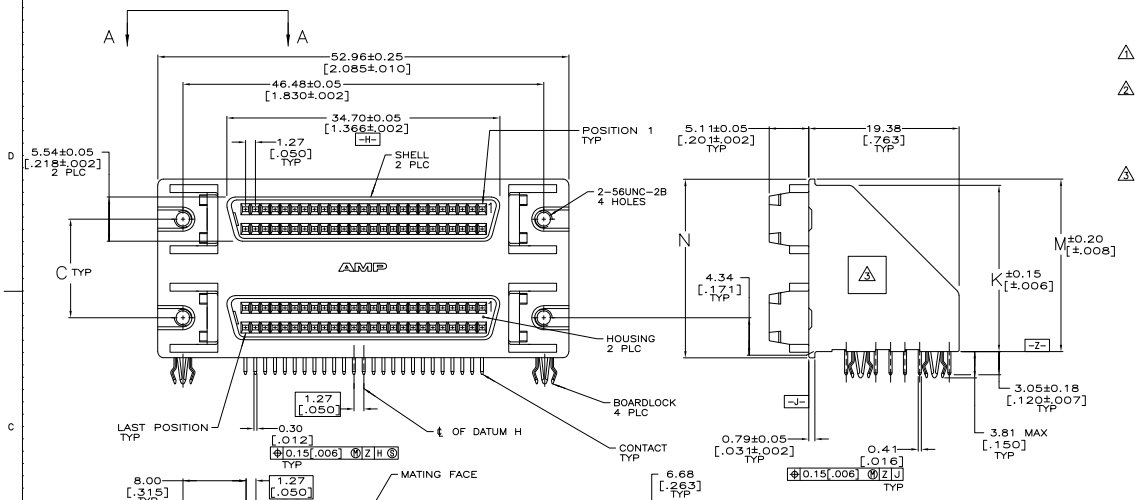

1. CONTACTS: PHOSPHOR BRONZE; HOUSING AND PIN SPACER: UL 94V-0 RATED, POLYESTER, BLACK; BRACKET: ZINC; SHELL: CARBON STEEL; BOARDLOCKS: COPPER ALLOY.
2. CONTACTS: 0.76μm[.000030] MIN GOLD FOR A LENGTH OF 0.64[.025] MIN FROM MATING END, 3.81μm [.000150] MIN TIN-LEAD ON OPPOSITE END FOR A LENGTH OF 3.23 [.127] MIN, BOTH OVER 1.27μm [.000050] MIN NICKEL.
   SHELLS: 5.08μm[.000200] MIN TIN OVER 1.27μm[.000050] MIN COPPER.
   BRACKET: 3.81μm[.000150] MIN NICKEL OVER 5.08μm[.000200] MIN COPPER.
   BOARDLOCKS: 5.08μm[.000200] MIN TIN-LEAD OVER 1.27μm[.000050] MIN NICKEL.
3. 0.5" X 0.5" ADHESIVE DATE CODE LABEL. AFFIXED IN APPROX. AREA SHOWN OR ON OPPOSITE END OF PART.

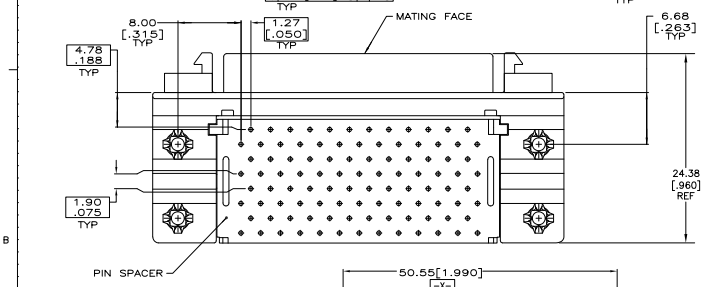

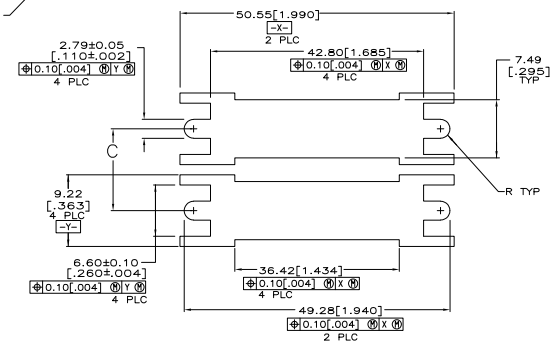

RECOMMENDED PANEL CUTOUT

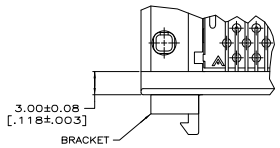

VIEW A-A

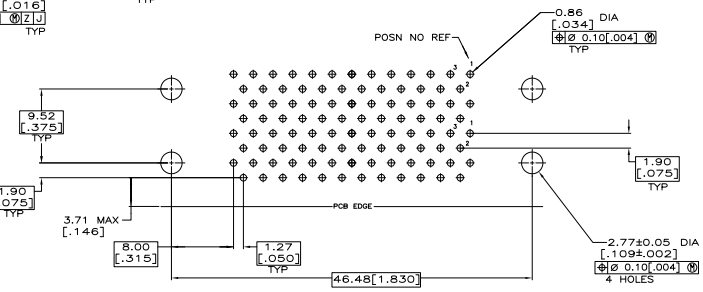

P.C.BOARD MOUNTING DIMENSIONS
CONNECTOR SIDE
P.C.BOARD THICKNESS 1.57±0.20 [.062±.008]

N	M	K	C	NO OF POSN	PART NUMBER
23.01 [.906]	22.20 [.874]	21.39 [.842]	12.70 [.500]	50	787656-1

THIS DRAWING IS A CONTROLLED DOCUMENT.

DIMENSIONS: mm[INCHES]

TOLERANCE UNLESS OTHERWISE SPECIFIED:
0 PLC ± -
1 PLC ± -
2 PLC ± 0.13 [.005]
3 PLC ± -
4 PLC ± -
ANGLES ± -

MATERIAL
FINISH

DWN	C.DORWART	14 DEC 95
CHK	R.STONE	18 DEC 95
APVD	R.WALTER	18 DEC 95
PRODUCT SPEC	108-1228	
APPLICATION SPEC	114-40029	
WEIGHT	-	

CUSTOMER DRAWING

Tyco Electronics Corporation
Harrisburg, PA 17105-3608

NAME: RECEPTACLE ASSEMBLY, STACKED, RIGHT ANGLE, .050 SERIES, AMPLIMITE

SIZE	CAGE CODE	DRAWING NO	RESTRICTED TO
A1	00779	C-787656	-

SCALE 4:1 SHEET 1 OF 1 REV F1

AMP 4805 REV 31MAR2000

Downloaded from Elcodis.com electronic components distributor