8-1542002-2 Product Details

Live Product Chat US Only 8:30am - 5pm ET, Mon - Fri

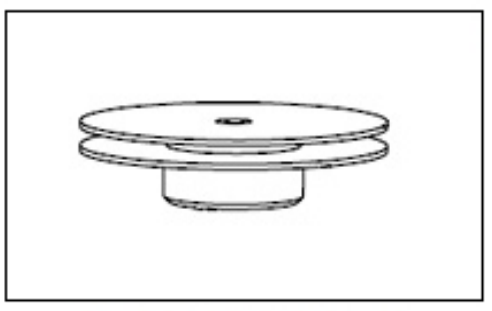

8-1542002-2

TE Part Number: 8-1542002-2

Active

Add to Part List

Heat Sink Assemblies

Converted to EU RoHS/ELV Compliant (Statement of Compliance)

Product Highlights:

- Heat Sink
- BGA
- Package Size = 40 [1.576] mm [in]
- For Use With BGA Semiconductor Packages
- Power Air Velocity Thermal Resistance

View all Features | Find Similar Products

Quick Links

- Check Pricing & Availability
- Search for Tooling
- Product Feature Selector
- Contact Us About This Product

Documentation & Additional Information

Product Drawings:
- 40mm HEATSINK ASSEMBLY (HTS478-U) (PDF, English)

Catalog Pages/Data Sheets:
- None Available

Product Specifications:
- None Available

Application Specifications:
- None Available

Instruction Sheets:
- None Available

CAD Files:
- None Available

List all Documents

Additional Information:
- Product Line Information

Additional Product Images:
- Line Drawing
- Thermal Resistance Chart

Related Products:
- Tooling

Product Features (Please use the Product Drawing for all design activity)

Product Type Features:
- Product Type = Heat Sink
- Device Type = BGA
- For Use With = BGA Semiconductor Packages
- Finish = Black Anodize
- Material = Aluminum
- Comment = Mounting clip does not increase overall heat sink height.; Heat sink assembly includes Four Leg Standard Clip, Part Number 1542357-1.

Electrical Characteristics:
- Heat Sink Type = 3 Fin Radial

Termination Related Features:
- Height (mm [in]) = 12.47 [0.491]

Body Related Features:
- Package Size (mm [in]) = 40 [1.576]
- Flammability Rating = UL 94V-0

Configuration Related Features:
- Diameter (mm [in]) = 44.50 [1.750]

Industry Standards:
- RoHS/ELV Compliance = RoHS compliant, ELV compliant
- Lead Free Solder Processes = Not relevant for lead free process
- RoHS/ELV Compliance History = Converted to comply with RoHS directive

Other:
- Brand = Tyco Electronics
- Line = ChipCoolers

Interrelated Features

When Power (W) is:	And Air Velocity is:	Thermal Resistance (°C) is:
5.0	0 LFM	8.97
5.0	200 LFM	5.36
5.0	400 LFM	3.76
5.0	600 LFM	3.25
10.0	0 LFM	8.41
10.0	200 LFM	5.44
10.0	400 LFM	3.78
10.0	600 LFM	3.21
15.0	0 LFM	7.92
15.0	200 LFM	5.36
15.0	400 LFM	3.77
15.0	600 LFM	3.21

© 2008 Tyco Electronics Corporation All Rights Reserved