THIS DRAWING IS UNPUBLISHED. RELEASED FOR PUBLICATION ,19
© COPYRIGHT 19 BY AMP INCORPORATED. ALL RIGHTS RESERVED.

LOC	DIST
GP	00

REVISIONS

F	LTR	DESCRIPTION	DATE	DWN	APVD
	S	OBSOLETE -1,-2,-3 OS1D-0014-00	01NOV00	AH	JR

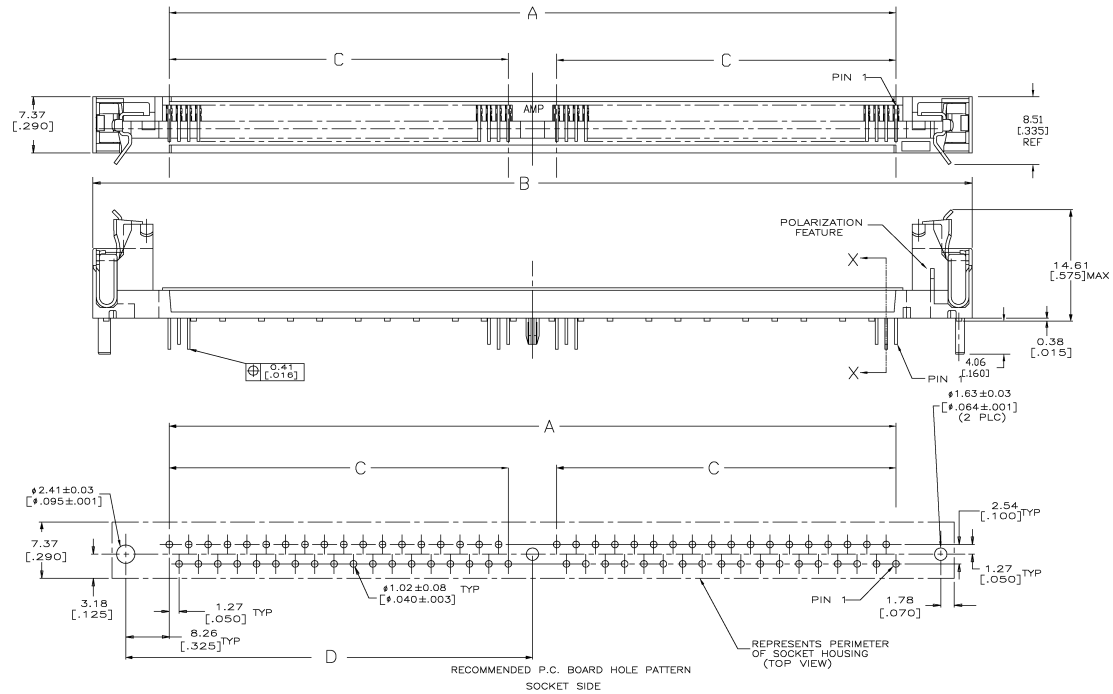

1. HOUSING-MATERIAL : LIQUID-CRYSTAL-POLYMER, COLOR: NATURAL.
2. CONTACT-MATERIAL : PHOS. BRONZE.
3. LATCH-MATERIAL : BRASS, NICKEL PLATE
4. CONTACT-PLATE: 0.00508[.000200] MIN. TIN/LEAD OVER 0.00127 [.000050] MIN NICKEL.
5. IN ADDITION TO THOSE RECOMMENDED "SIMM" P.C. BOARD DIMENSIONS AND TOLERANCES SHOWN, ALL JEDEC SPECIFICATIONS APPLY AS SHOWN ON MO-116, ISSUE A.
6. RECOMMENDED MATING S.I.M.M. TAB METALLURAGY: BASE METAL-COPPER. PLATING TO BE 0.00762[.000300] MIN TIN/LEAD OVER 0.00127[.000050] MIN NICKEL.
7. OBSOLETE

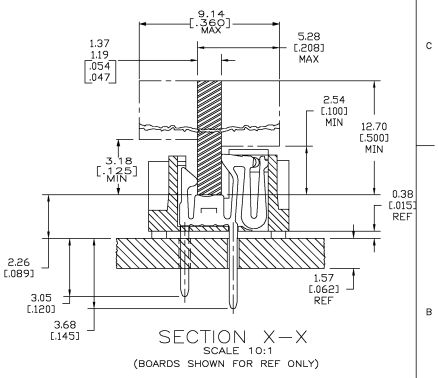

SECTION X-X
SCALE 10:1
(BOARDS SHOWN FOR REF ONLY)

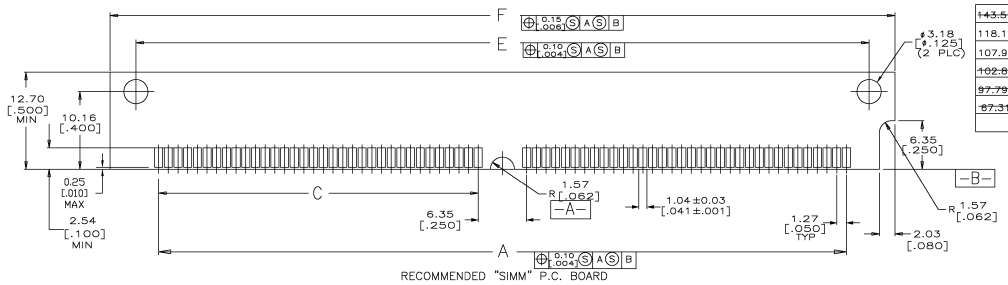

~~143.51[5.650]~~	~~136.75[5.384]~~	~~73.66[2.900]~~	~~62.23[2.450]~~	~~151.13[5.950]~~	~~130.81[5.150]~~	~~100~~	△1 822021-6
118.11[4.650]	111.35[4.384]	60.96[2.400]	49.53[1.950]	125.73[4.950]	105.41[4.150]	80	822021-5
107.95[4.250]	101.19[3.984]	55.88[2.200]	44.45[1.750]	115.57[4.550]	95.25[3.750]	72	822021-4
~~102.87[4.050]~~	~~96.11[3.784]~~	~~53.34[2.100]~~	~~41.91[1.650]~~	~~110.49[4.350]~~	~~90.17[3.550]~~	~~68~~	△1 822021-3
~~97.79[3.850]~~	~~91.03[3.584]~~	~~50.80[2.000]~~	~~39.37[1.550]~~	~~105.41[4.150]~~	~~85.09[3.350]~~	~~64~~	△1 822021-2
~~67.31[2.650]~~	~~60.55[2.384]~~	~~35.56[1.400]~~	~~24.13[.950]~~	~~74.93[2.950]~~	~~54.61[2.150]~~	~~40~~	△1 822021-1
F	E	D	C	B	A	NO OF POSN	PART NO

THIS DRAWING IS A CONTROLLED DOCUMENT.

DIMENSIONS: mm [INCHES]

TOLERANCES UNLESS OTHERWISE SPECIFIED
0 PLC ± -
1 PLC ± -
2 PLC ± 0.13[.005]
3 PLC ± -
ANGLES ± -

MATERIAL △1 △2 △3
FINISH △3 △4

DRN K. SALMON 3-21-91
CHK R. MILLER 3-25-91
APVD J. LAMBERT 3-25-91
PRODUCT SPEC —
APPLICATION SPEC —
WEIGHT —
CUSTOMER DRAWING

AMP Incorporated
Harrisburg PA 17105-3608

TITLE CONNECTOR, MICRO-EDGE, .050, VERT, TIN PL, W/METAL LATCH

SIZE	CAGE CODE	DRAWING NO	RESTRICTED TO
A1	00779	C-822021	—

SCALE 4:1 SHEET 1 OF 1 REV S

AMP 4805 REV 22F1285

01NOV00 8:45am /home/amp12184/edmmad/

Downloaded from Elcodis.com electronic components distributor